Slim Cephe Sistem
Slim Facede System

Harmony 35

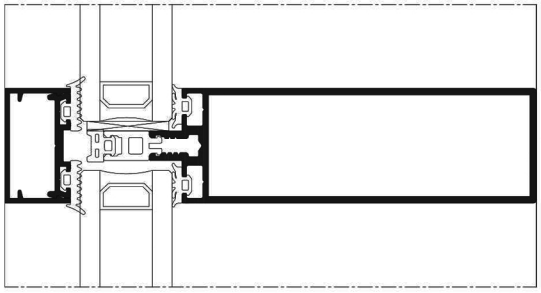

TEKNİK ÖZELLİKLER / TECHNICAL PROPERTIES

Profil Genişliği / Profile Width	**35 mm**
Profil Et Kalınlığı / Profile Wall Thickness	**2 mm**
Düşey Taşıyıcı Profil Derinliği / Mullion Profile Depth	**60-150 mm**
Yatay Taşıyıcı Profil Derinliği / Transom Profile Depth	**68-158 mm**
Min. Cam Kalınlığı / Min. Glazing Thickness	**10 mm**
Maks. Cam Kalınlığı / Max. Glazing Thickness	**38 mm**
Min. Kanat Boyut / Min. Sash Dimension	**700 x 1200 mm**
Maks. Kanat Ağırlığı / Max. Sash Weight	**120 kg**

PERFORMANS DEĞERLERİ / PERFORMANCE VALUES

EN 12152 Hava Geçirgenliği / Air Permability	
EN 12154 Su Sızdırmazlığı / Water Tightness	
EN 13830 Rüzgar Yüküne Dayanım / Wind Resistance	
Min. Termal Isı Yalıtımı / Min. Thermal Insulation	**Uf: 2,59 - 3,16 W/(m².K)**

UYGULAMA SEÇENEKLERİ / APPLICATION OPTIONS

Dışa Açılır Ters Vasistas Gizli Kanat / Outward Opening Reverse Transom Hidden Vent ✓

Kapaklı Cephe / Covered Facade ✓

KAPAKLI CEPHE ISI YALITIM DEĞERİ
COVERED FACADE THERMAL INSULATION VALUES

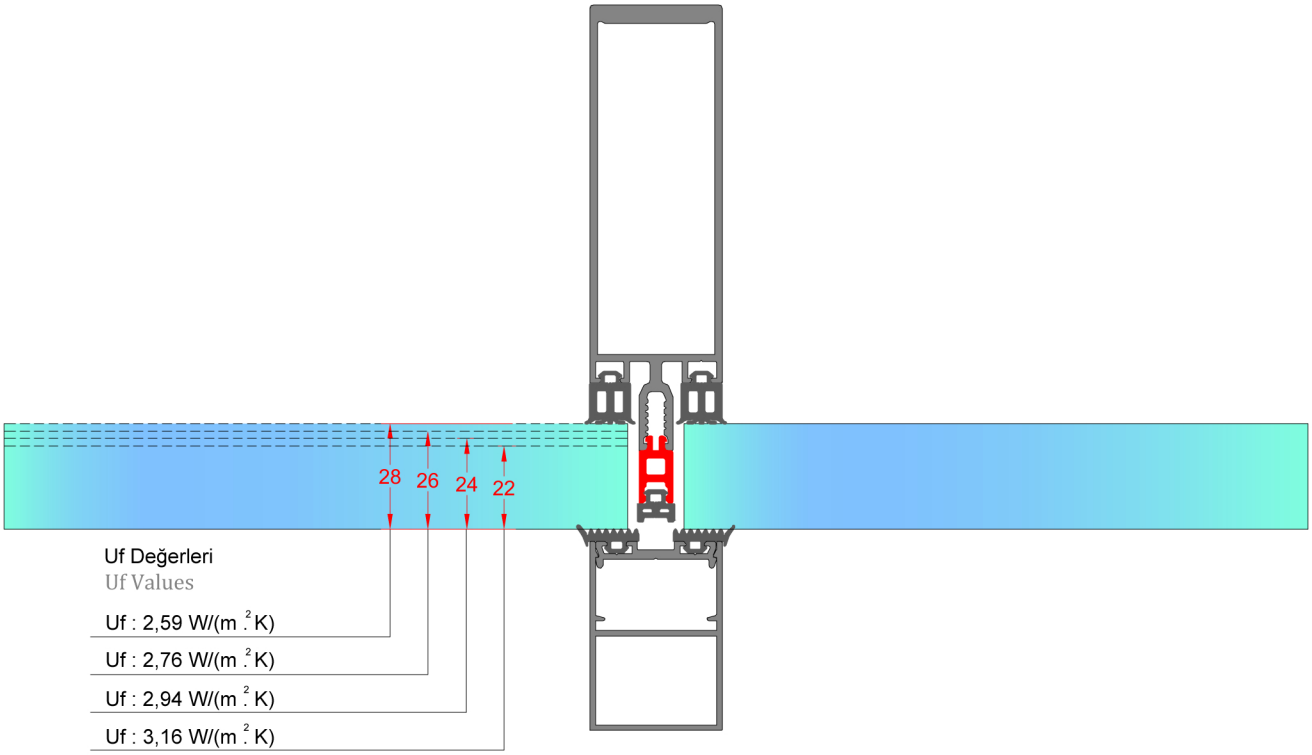

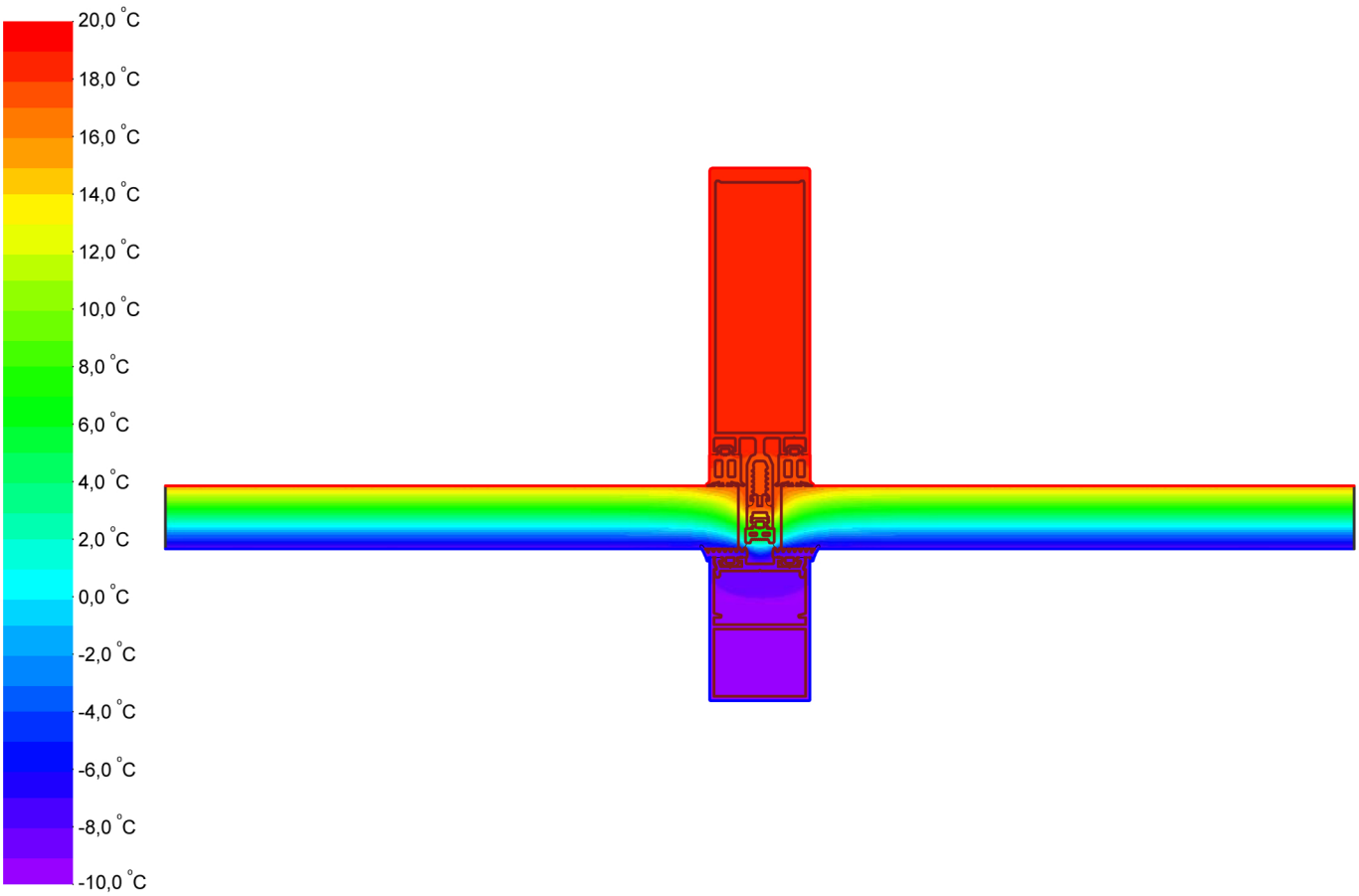

Material	λ[W/(m·K)]	ε
Aluminium (Si Alloys)	160,000	0,900
EPDM (ethylene propylene diene monomer)	0,250	0,900
Panel	0,035	0,900
Polyamid 6.6 with 25% glass fibre	0,300	0,900
Unventilated air cavity	anisotropic	

Boundary Condition	q[W/m²]	θ[°C]	R[(m²·K)/W]	ε
Epsilon 0.9				0,900
Exterior, normal		-10,000	0,040	
Interior, normal, horizontal		20,000	0,130	
Symmetry/Model section	0,000			

PROFİL KESİTİ PROFILE SECTION	PROFİL KODU PROFILE CODE	PROFİL ADI PROFILE NAME	Jx cm^4	Jy cm^4	AĞIRLIK (kg/m) WEIGHT
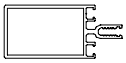	14596	60 mm DÜŞEY PROFİLİ 60 mm VERTICAL PROFILE	27,37 cm^4	7,61 cm^4	1,283 kg/m
	14595	100 mm DÜŞEY PROFİLİ 100 mm VERTICAL PROFILE	113,42 cm^4	12,68 cm^4	1,964 kg/m
	14594	150 mm DÜŞEY PROFİLİ 150 mm VERTICAL PROFILE	292,83 cm^4	18,14 cm^4	2,506 kg/m
	14597	68 mm YATAY PROFİLİ 68 mm HORIZONTAL PROFILE	8,40 cm^4	30,66 cm^4	1,292 kg/m
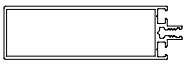	14598	108 mm YATAY PROFİLİ 108 mm HORIZONTAL PROFILE	12,77 cm^4	95,19 cm^4	1,725 kg/m
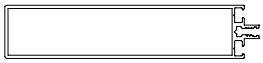	14599	158 mm YATAY PROFİLİ 158 mm HORIZONTAL PROFILE	18,22 cm^4	248,73 cm^4	2,267 kg/m
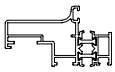	5029-5030-12	YALITIMLI KASET PROFİLİ THERMAL BREAK CASEDDE PROFILE	20,07 cm^4	4,50 cm^4	1,250 kg/m
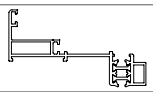	5063-5066	KAPAKLI CEPHE İÇİ KASA PROFİLİ COVERED FACADE FRAME PROFILE	41,99 cm^4	5,40 cm^4	1,251 kg/m
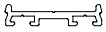	14600	KAPAK ALTI BASKI PROFİLİ COVER UNDER EXTENSION PROFILE	-	-	0,246 kg/m
	14169	KAPAK PROFİLİ COVER PROFILE	-	-	0,311 kg/m
	14163	LED KAPAK PROFİLİ LED COVER PROFILE	-	-	0,122 kg/m
	14168	KAPAK PROFİLİ COVER PROFILE	-	-	0,686 kg/m
	14167	LED UYGULAMALI KAPAK PROFİLİ LED APPLICATION COVER PROFILE	-	-	0,583 kg/m
	5097	YÜKSELTME ÇITA PROFİLİ EXTENSION BEAD PROFILE	-	-	0,198 kg/m
	5059	YÜKSELTME ÇITA PROFİLİ EXTENSION BEAD PROFILE	-	-	0,210 kg/m
	13102	YÜKSELTME ÇITA PROFİLİ EXTENSION BEAD PROFILE	-	-	0,250 kg/m
	13103	YÜKSELTME ÇITA PROFİLİ EXTENSION BEAD PROFILE	-	-	0,309 kg/m
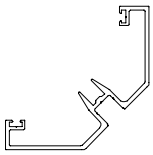	13091	90° DIŞTAN KÖŞE DÖNÜŞ KAPAK PROFİLİ 90° CORNER COVER PROFILE	-	-	1,950 kg/m
	5991	KAPAK PROFİLİ COVER PROFILE	-	-	0,108 kg/m
	14603	90° DIŞTAN KÖŞE DÖNÜŞ KAPAK PROFİLİ 90° CORNER COVER PROFILE	-	-	0,590 kg/m
	14604	YATAY BAĞLANTI PROFİLİ CONNECTION PROFILE FOR HORIZONTAL	-	-	0,843 kg/m

PROFİL KESİTİ PROFILE SECTION	PROFİL KODU PROFILE CODE	PROFİL ADI PROFILE NAME	Jx cm^4	Jy cm^4	AĞIRLIK (kg/m) WEIGHT
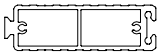	14605	DÜŞEY BAĞLANTI PROFİLİ CONNECTION PROFILE FOR VERTICAL		-	2,386 kg/m
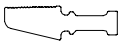	14601	CAM ALTI TAKOZ PROFİLİ SUB-GLAZING WEDGE PROFILE		-	0,464 kg/m
	14602	CAM ALTI TAKOZ PROFİLİ SUB-GLAZING WEDGE PROFILE		-	0,614 kg/m

AKSESUAR ACCESSORY	STOK KODU REFERENCE CODE	AKSESUAR ADI DESCRIPTION	AKSESUAR KODU PRODUCT CODE		PAKET PACK
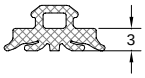	AKS1237	CEPHE CAM FİTİLİ (3 mm) FACADE GLAZING GASKET (3 mm)	FS35-CF.03		169 mt / paket 10 kg
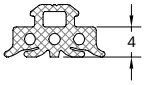	AKS1238	CEPHE CAM FİTİLİ (4 mm) FACADE GLAZING GASKET (4 mm)	FS35-CF.04		149 mt / paket 10 kg
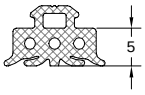	AKS1239	CEPHE CAM FİTİLİ (5 mm) FACADE GLAZING GASKET (5 mm)	FS35-CF.05		119 mt / paket 10 kg
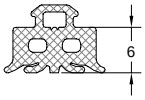	AKS1241	CEPHE CAM FİTİLİ (6 mm) FACADE GLAZING GASKET (6 mm)	FS35-CF.06		94 mt / paket 10 kg
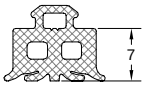	AKS1242	CEPHE CAM FİTİLİ (7 mm) FACADE GLAZING GASKET (7 mm)	FS35-CF.07		92 mt / paket 10 kg
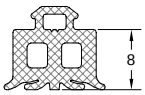	AKS1243	CEPHE CAM FİTİLİ (8 mm) FACADE GLAZING GASKET (8 mm)	FS35-CF.08		87 mt / paket 10 kg
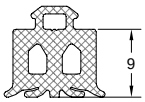	AKS1244	CEPHE CAM FİTİLİ (9 mm) FACADE GLAZING GASKET (9 mm)	FS35-CF.09		80 mt / paket 10 kg
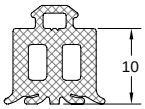	AKS1320	CEPHE CAM FİTİLİ (10 mm) FACADE GLAZING GASKET (10 mm)	FS35-CF.10		75 mt / paket 10 kg
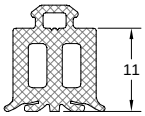	AKS1245	CEPHE CAM FİTİLİ (11 mm) FACADE GLAZING GASKET (11 mm)	FS35-CF.11		68 mt / paket 10 kg
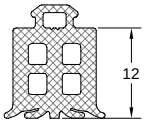	AKS1246	CEPHE CAM FİTİLİ (12 mm) FACADE GLAZING GASKET (12 mm)	FS35-CF.12		64 mt / paket 10 kg

AKSESUAR ACCESSORY	STOK KODU REFERENCE CODE	AKSESUAR ADI DESCRIPTION	AKSESUAR KODU PRODUCT CODE		PAKET PACK
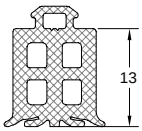	AKS1247	CEPHE CAM FİTİLİ (13 mm) FACADE GLAZING GASKET (13 mm)	FS35-CF.13		60 mt / paket 10 kg
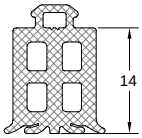	AKS1248	CEPHE CAM FİTİLİ (14 mm) FACADE GLAZING GASKET (14 mm)	FS35-CF.14		56 mt / paket 10 kg
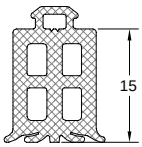	AKS1249	CEPHE CAM FİTİLİ (15 mm) FACADE GLAZING GASKET (15 mm)	FS35-CF.15		54 mt / paket 10 kg
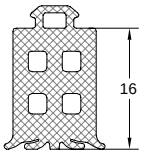	AKS1250	CEPHE CAM FİTİLİ (16 mm) FACADE GLAZING GASKET (16 mm)	FS35-CF.16		46 mt / paket 10 kg
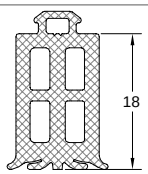	AKS1252	CEPHE CAM FİTİLİ (18 mm) FACADE GLAZING GASKET (18 mm)	FS35-CF.18		42 mt / paket 10 kg
	AKS1289	KAPAK ALTI DIŞ CAM FİTİLİ UNDER COVER OUTHER GLAZING GASKET	FS35-KF.30		136 mt / paket 10 kg
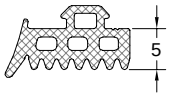	AKS1290	KAPAK ALTI DIŞ CAM FİTİLİ UNDER COVER OUTHER GLAZING GASKET	FS35-KF.50		103 mt / paket 10 kg
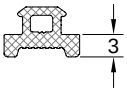	AKS7176	CEPHE ISI İZOLATÖR FİTİLİ (3 mm) FACADE THERMAL INSULATOR GASKET (3 mm)	FS35-IF.03		212 mt / paket 10 kg/mt
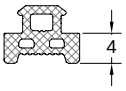	AKS1378	CEPHE ISI İZOLATÖR FİTİLİ (4 mm) FACADE THERMAL INSULATOR GASKET (4 mm)	FS35-IF.04		166 mt / paket 10 kg/mt
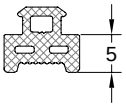	AKS7177	CEPHE ISI İZOLATÖR FİTİLİ (5 mm) FACADE THERMAL INSULATOR GASKET (5 mm)	FS35-IF.05		147 mt / paket 10 kg/mt

AKSESUAR ACCESSORY	STOK KODU REFERENCE CODE	AKSESUAR ADI DESCRIPTION	AKSESUAR KODU PRODUCT CODE		PAKET PACK
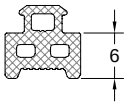	AKS1379	CEPHE ISI İZOLATÖR FİTİLİ (6 mm) FACADE THERMAL INSULATOR GASKET (6 mm)	FS35-IF.06		140 mt / paket 10 kg/mt
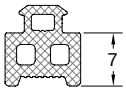	AKS1380	CEPHE ISI İZOLATÖR FİTİLİ (7 mm) FACADE THERMAL INSULATOR GASKET (7 mm)	FS35-IF.07		121 mt / paket 10 kg/mt
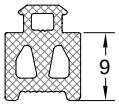	AKS7178	CEPHE ISI İZOLATÖR FİTİLİ (9 mm) FACADE THERMAL INSULATOR GASKET (9 mm)	FS35-IF.09		96 mt / paket 10 kg/mt
	AKS1446	KAMA FİTİLİ (2 MM) DERZ GASKET(2 mm)	FS35-KMF.02		250 mt / paket 10 kg/mt
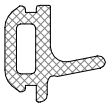	AKS1280	KASA DERZ FİTİLİ FRAME JOINT GASKET	FS35-KTF.20		140 mt / paket 10 kg/mt
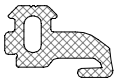	AKS1294	CEPHE GİZLİ KANAT-KASA FİTİLİ HIDDEN SASH-FRAME GASKET	FS35-KYF.10		113 mt / paket 10 kg/mt
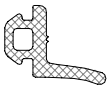	AKS1261	CEPHE İÇİ KASET DERZ FİTİLİ INTERIOR FACADE CASSETTE JOINT GASKET	FS35-TF.20		166 mt / paket 10 kg/mt
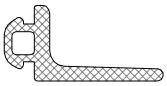	AKS1262	CEPHE İÇİ KASET DERZ FİTİLİ INTERIOR FACADE CASSETTE JOINT GASKET	FS35-TF.40		115 mt / paket 10 kg/mt
	AKS1375	KASA BİNİ FİTİLİ FRAME MOUNTING GASKET	FS35-KYF.03		215 mt / paket 10 kg/mt
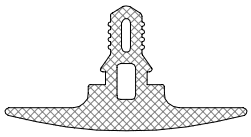	AKS1293	YARI KAPAKLI CEPHE DÜŞEY FİTİLİ SEMI COVERED FACADE VERTICAL GASKET	FS35-KF.10		52 mt / paket 10 kg/mt

AKSESUAR ACCESSORY	STOK KODU REFERENCE CODE	AKSESUAR ADI DESCRIPTION	AKSESUAR KODU PRODUCT CODE		PAKET PACK
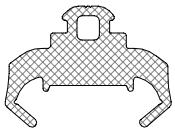	AKS1305	ORTA BASKI FİTİLİ CENTER PRESSURE GASKET	FS35-OYF.30		51 mt / paket 10 kg/mt
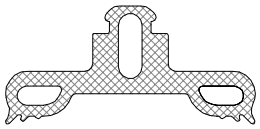	AKS1304	SİLİKON CEPHE AÇILI ORTA BASKI FİTİLİ STRUCTURAL FACADE ANGLE PRESS URE GASKET	FS35-OYF.40		45 mt / paket 10 kg/mt
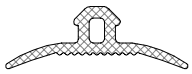	AKS1268	ENTEGRE CEPHE DIŞ DERZ FİTİLİ INTEGRATED FACADE OUTSIDE GLAZING GASKET	FS35-STF.30		159 mt / paket 10 kg/mt
	AKS8419	ENTEGRE CEPHE DIŞ DERZ FİTİLİ SİLİKON ESASLI INTEGRATED FACADE OUTSIDE GLAZING GASKET			90 mt / paket 9 kg/mt
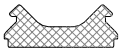	AKS1292	OMEGA KAPAK FİTİLİ OMEGA COVER GASKET	FS35-KF.20		135 mt / paket 10 kg/mt
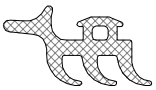	AKS1269	CAM YASTIK FİTİLİ GLAZING GASKET	FS35-CYF.10		105 mt / paket 10 kg/mt
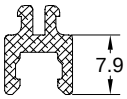	AKS470	CEPHE ISI İZOLATÖR (7.9 mm) FACADE THERMAL INSULATOR (7.9 mm)	FS35-İZ.79		125 mt / 25 boy
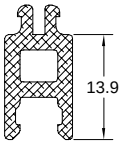	AKS7185	CEPHE ISI İZOLATÖR (13.9 mm) FACADE THERMAL INSULATOR (13.9 mm)	FS35-İZ.139		150 mt / 25 boy
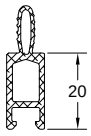 ÖLÇEK:1/2	AKS472	CEPHE ISI İZOLATÖR (20 mm) FACADE THERMAL INSULATOR (20 mm)	FS35-PLS.20		125 mt / 25 boy
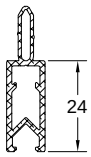 ÖLÇEK:1/2	AKS474	CEPHE ISI İZOLATÖR 24 mm) FACADE THERMAL INSULATOR (24 mm)	FS35-PLS.24		125 mt / 25 boy
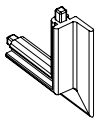	AKS1490	CEPHE KÖŞE VULKANİZE FİTİL SAĞ/SOL (TF.20+TF.20) FACADE CORNER VULCANIZE GASKET RIGHT/LEFT (TF.20+TF.20)	FS35-CVK.20		40 tk / paket
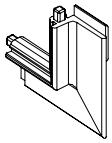	AKS1491	CEPHE KÖŞE VULKANİZE FİTİL SAĞ/SOL (TF.40+TF.40) FACADE CORNER VULCANIZE GASKET RIGHT/LEFT (TF.40+TF.40)	FS35-CVK.40		40 tk / paket

AKSESUAR ACCESSORY	STOK KODU REFERENCE CODE	AKSESUAR ADI DESCRIPTION	AKSESUAR KODU PRODUCT CODE		PAKET PACK
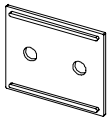 ÖLÇEK:1/4	AKS2248	FS35 - 68'LİK HEMYÜZ GENLEŞME YAKASI (EPDM) SYMMETRICAL EXPANSION GASKET-68 (EPDM)	FS35-HYK.68		100 ad / paket
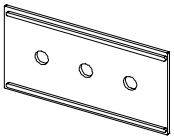 ÖLÇEK:1/4	AKS3144	FS35 - 108'LİK HEMYÜZ GENLEŞME YAKASI (EPDM) SYMMETRICAL EXPANSION GASKET-108 (EPDM)	FS35-HYK.108		100 ad / paket
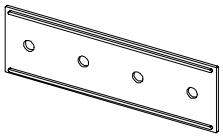 ÖLÇEK:1/4	AKS2407	FS35 - 158'LİK HEMYÜZ GENLEŞME YAKASI (EPDM) SYMMETRICAL EXPANSION GASKET-158 (EPDM)	FS35-HYK.158		100 ad / paket
	AKS8534	PVC LED KAPAK (ŞEFFAF) PVC LED KAPAK (TRANSPARENT)	FS35-PLK.300		... boy / mt
	AKS8535	PVC LED KAPAK (BEYAZ) PVC LED KAPAK (WHITE)	FS35-PLK.301		
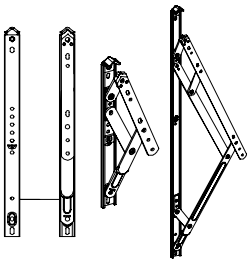	AKS646	CEPHE MAKASI (10") FACADE TRUSS	FS35-CMW.646		6 tk / 1 paket
	AKS647	CEPHE MAKASI (12") FACADE TRUSS	FS35-CMW.647		
	AKS648	CEPHE MAKASI (14") FACADE TRUSS	FS35-CMW.648		
	AKS649	CEPHE MAKASI (16") FACADE TRUSS	FS35-CMW.649		
	AKS650	CEPHE MAKASI (18") FACADE TRUSS	FS35-CMW.650		
	AKS651	CEPHE MAKASI (20") FACADE TRUSS	FS35-CMW.651		
	AKS652	CEPHE MAKASI (22") FACADE TRUSS	FS35-CMW.652		
	AKS653	CEPHE MAKASI (24") FACADE TRUSS	FS35-CMW.653		
	AKS654	CEPHE MAKASI (26") FACADE TRUSS	FS35-CMW.654		
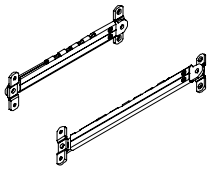	AKS644	AYARLI KADEMELİ MAKAS (3 KADEME) ÇELİK ADJUSTABLE (3 LEVEL) STEEL	FS35-AKM.644		5 ad / paket
	AKS645	AYARLI KADEMELİ MAKAS (5 KADEME) ÇELİK ADJUSTABLE (5 LEVEL) STEEL	FS35-AKM.645		
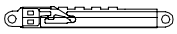	AKS500	AYARLI KADEMELİ MAKAS (3 KADEME) SAC ADJUSTABLE (3 LEVEL) STEEL	FS35-AKM.499		10 ad / paket
	AKS499	AYARLI KADEMELİ MAKAS (5 KADEME) SAC ADJUSTABLE (5 LEVEL) STEEL	FS35-AKM.500		
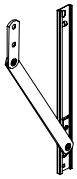	AKS642	SINIRLANDIRICI ÇELİK MAKAS 160 GRADER STEEL TRUSS-160	FS35-SM.642		10 ad / paket
	AKS643	SINIRLANDIRICI ÇELİK MAKAS 220 GRADER STEEL TRUSS-200	FS35-SM.643		

AKSESUAR ACCESSORY	STOK KODU REFERENCE CODE	AKSESUAR ADI DESCRIPTION	AKSESUAR KODU PRODUCT CODE		PAKET PACK
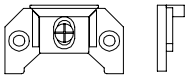	AKS753	AYARLI KARŞILIK ADJUSTABLE STRIKER	FS35-CSK.205		100 ad / paket
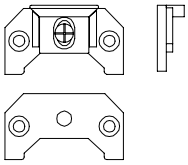	AKS7972	AYARLI KARŞILIK + ALT DESTEK PARÇASI ADJUSTABLE STRIKER + BOTTOM FEED	FS35-CKB.207		100 ad / paket
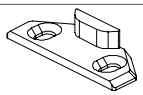	AKS754	SABİT KARŞILIK FIX STRIKER	FS35-CSK.206		100 ad / paket
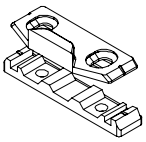	AKS8510	SABİT KARŞILIK + ALT DESTEK PARÇASI FIX STRIKER + BOTTOM FEED	FS35-CSK.207		100 ad / paket
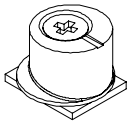	AKS7289	AYARLI TİJ PİM ADJUSTABLE STEM BAR PIN	FS35-AP.89		100 ad / paket
	AKS739	TİJ PİMİ STEM BAR PIN	FS35-İP.100		100 ad / paket
	AKS4265	HAREKET TRANSFER KÖŞE PARÇASI DYNAMIC TRANSFER CORNER PART	FS35-KIT.162		1 ad / paket
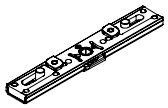	AKS7290	CEPHE GEARBOX FACADE GEARBOX	FS35-CG.7290		1 ad / paket
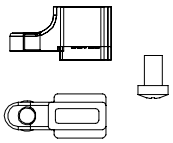	AKS755	TİJ BAĞLANTI PARÇASI STEM BAR CONNECTION PART	FS35-ÇDB.222		1 ad / paket
	AKS7291	TEK YÖNLÜ İLETİM GÖVDESİ ONE WAY COMMUNICATION BODY	FS35-TYG.291		1 ad / paket
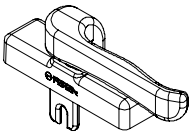	AKS137	FORZA BÜKÜMLÜ CEPHE KOLU SLOTLU (NATUREL) FORZA FACADE HANDLE (NATURAL)	FS35-FCK.880		1 ad / paket
	AKS138	FORZA BÜKÜMLÜ CEPHE KOLU SLOTLU (BEYAZ) FORZA FACADE HANDLE (WHITE)	FS35-FCK.881		
	AKS139	FORZA BÜKÜMLÜ CEPHE KOLU SLOTLU (SİYAH) FORZA FACADE HANDLE (BLACK)	FS35-FCK.882		

AKSESUAR ACCESSORY	STOK KODU REFERENCE CODE	AKSESUAR ADI DESCRIPTION	AKSESUAR KODU PRODUCT CODE		PAKET PACK
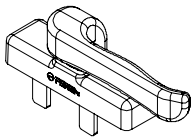	AKS140	FORZA BÜKÜMLÜ CEPHE KOLU MAÇALI (NATUREL) FORZA FACADE HANDLE (NATURAL)	FS35-FCK.883		1 ad / paket
	AKS141	FORZA BÜKÜMLÜ CEPHE KOLU MAÇALI (BEYAZ) FORZA FACADE HANDLE (WHITE)	FS35-FCK.884		
	AKS142	FORZA BÜKÜMLÜ CEPHE KOLU MAÇALI (SİYAH) FORZA FACADE HANDLE (BLACK)	FS35-FCK.885		
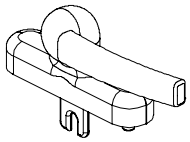	AKS135	FORZA EFOR CEPHE KOLU SLOTLU (NATUREL) FORZA EFOR FACADE HANDLE SINGLE LATCH (NATURAL)	FS35-FEK.135		1 ad / paket
	AKS134	FORZA EFOR CEPHE KOLU SLOTLU (BEYAZ) FORZA EFOR FACADE HANDLE SINGLE LATCH (WHITE)	FS35-FEK.134		
	AKS136	FORZA EFOR CEPHE KOLU SLOTLU (SİYAH) FORZA EFOR FACADE HANDLE SINGLE LATCH (BLACK)	FS35-FEK.136		
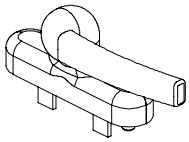	AKS131	FORZA EFOR CEPHE KOLU MAÇALI (NATUREL) FORZA EFOR FACADE HANDLE (NATURAL)	FS35-FEK.131		1 ad / paket
	AKS132	FORZA EFOR CEPHE KOLU MAÇALI (BEYAZ) FORZA EFOR FACADE HANDLE (WHITE)	FS35-FEK.132		
	AKS133	FORZA EFOR CEPHE KOLU MAÇALI(SİYAH) FORZA EFOR FACADE HANDLE (BLACK)	FS35-FEK.133		
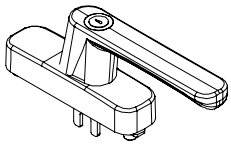	AKS7292	İTHAL DIŞA AÇILIR KİLİTLİ CEPHE KOLU IMPORTED BLOCK TOP-HUNG CREMONE	FS35-SKL.7292		1 ad / paket
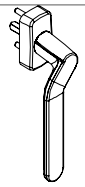	AKS7293	İTHAL SAĞ KIVRIK CEPHE KOLU IMPORTED OFFSET FACADE HANDLE (RIGHT)	FS35-SKV.7293		1 ad / paket
	AKS7294	İTHAL SOL KIVRIK CEPHE KOLU IMPORTED OFFSET FACADE HANDLE (LEFT)	FS35-SKV.7294		
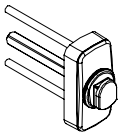	AKS7296	İTHAL ÇİFT DİLLİ SÖKÜLEBİLİR KOL MANŞETİ IMPORTED FACADE HANDLE	FS35-SKM.7296		1 ad / paket
	AKS7297	İTHAL TAK-ÇIKAR KOL IMPORTED DETACHABLE HANDLE	FS35-TCK.7297		1 ad / paket
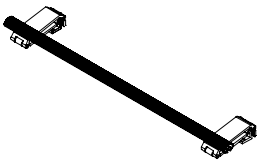	AKS119	MAFSALLI SİLİKON CEPHE KOLU FACADE STRUCTURAL FACADE HANDLE	FS35-MK.119		1 ad / paket
	AKS4174	MAFSALLI KAPAKLI CEPHE KOLU FACADE COVERED HANDLE	FS35-MK.4174		
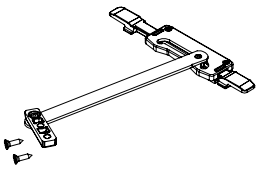	AKS7831	SINIRLAYICI GRADER STEEL TRUSS	FS35-SM.7831		1 ad / paket
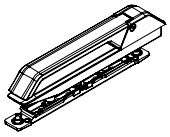	AKS7832	PLEXSUS KOL PLEXSUS HANDLE	FS35-PCK.7832		1 ad / paket

AKSESUAR ACCESSORY	STOK KODU REFERENCE CODE	AKSESUAR ADI DESCRIPTION	AKSESUAR KODU PRODUCT CODE		PAKET PACK
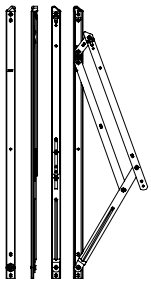	AKS7298	G-U SECURISTYLE CEPHE MAKASI (10") G-U SECURISTYLE FACADE TRUSS (10")	FS35-GSM.7298		6 tk / paket
	AKS7973	G-U SECURISTYLE CEPHE MAKASI (12") G-U SECURISTYLE FACADE TRUSS (12")	FS35-GSM.7973		
	AKS7974	G-U SECURISTYLE CEPHE MAKASI (16") G-U SECURISTYLE FACADE TRUSS (16")	FS35-GSM.7974		
	AKS7975	G-U SECURISTYLE CEPHE MAKASI (22") G-U SECURISTYLE FACADE TRUSS (22")	FS35-GSM.7975		
	AKS7976	G-U SECURISTYLE CEPHE MAKASI (26") G-U SECURISTYLE FACADE TRUSS (26")	FS35-GSM.7976		
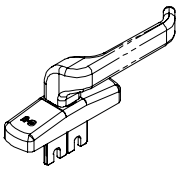	AKS7304	G-U MAÇALI CEPHE KOLU G-U FACADE HANDLE	FS35-GMK.7304		1 ad / paket
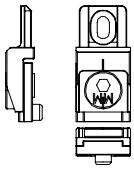	AKS7299	G-U CEPHE MAKAS AYARLAYICI G-U ADJUSTABLE TRUSS	FS35-GCM.7299		1 ad / paket
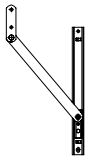	AKS7300	G-U SINIRLANDIRICI MAKAS G-U GRADER TRUSS	FS35-GSM.7300		1 ad / paket
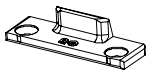	AKS7301	G-U DÜZ KARŞILIK G-U STRAIGHT OPPOSITE	FS35-GDK.7301		1 ad / paket
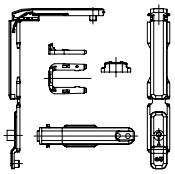	AKS7302	G-U KÖŞE TRANSFER BAĞLANTI PARÇASI G-U CORNER TRANSFER CONNECTION PART	FS35-GKT.7302		1 ad / paket
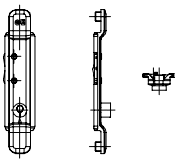	AKS7303	G-U TİJ KİLİTLEME PARÇASI G-U STEM BAR LOCKING PART	FS35-GKP.7303		1 ad / paket
	AKS1440	POLİÜRETAN DOLGU SOSİS(10mm) POLYURETHANE FILLED GROUTING (10 mm)	FS35-PDS.10		900 mt / paket
	AKS1441	POLİÜRETAN DOLGU SOSİS(15mm) POLYURETHANE FILLED SAUSAGE (15 mm)	FS35-PDS.15		450 mt / paket
	AKS1442	POLİÜRETAN DOLGU SOSİS(20mm) POLYURETHANE FILLED SAUSAGE (20 mm)	FS35-PDS.20		270 mt / paket
	AKS7306	İLLBRUCK FS550 DERZ SİLİKONU FS550 ILLBRUCK JOINT SILICONE	FS35-IDS.7306		25 ad / paket

AKSESUAR ACCESSORY	STOK KODU REFERENCE CODE	AKSESUAR ADI DESCRIPTION	AKSESUAR KODU PRODUCT CODE		PAKET PACK
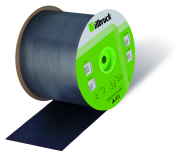	AKS7307	İLLBRUCK ME220 1 MM EPDM MEMBRAN ME220 ILLBRUCK 1 MM EPDM MEMBRANE	FS35-IMB.7307		900 mt / paket
	AKS7308	İLLBRUCK OTO15 EPDM MEMBRAN YAPIŞTIRICI OTO15 ILLBRUCK EPDM MEMBRAN ADHESIVE	FS35-IMB.7308		12 ad / paket
	AKS9308	DIN7981 Ø5.5X25 mm YSB Başlı Matkap Uçlu Vida Ø5.5X25 mm SELF DRILLING SCREWS	FS35-M5.5X25		100 ad / paket
	AKS9309	DIN7981 Ø5.5X28 mm YSB Başlı Matkap Uçlu Vida Ø5.5X28 mm SELF DRILLING SCREWS	FS35-M5.5X28		100 ad / paket
	AKS9310	DIN7981 Ø5.5X32 mm YSB Başlı Matkap Uçlu Vida Ø5.5X32 mm SELF DRILLING SCREWS	FS35-M5.5X32		100 ad / paket
	AKS9311	DIN7981 Ø5.5X36 mm YSB Başlı Matkap Uçlu Vida Ø5.5X36 mm SELF DRILLING SCREWS	FS35-M5.5X36		100 ad / paket
	AKS9312	DIN7981 Ø5.5X38 mm YSB Başlı Matkap Uçlu Vida Ø5.5X38 mm SELF DRILLING SCREWS	FS35-M5.5X38		100 ad / paket
	AKS9313	DIN7981 Ø5.5X42 mm YSB Başlı Matkap Uçlu Vida Ø5.5X42 mm SELF DRILLING SCREWS	FS35-M5.5X42		100 ad / paket
	AKS9314	DIN7981 Ø5.5X46 mm YSB Başlı Matkap Uçlu Vida Ø5.5X46 mm SELF DRILLING SCREWS	FS35-M5.5X46		100 ad / paket
	AKS9332	DIN7981 Ø5.5X50 mm YSB Başlı Matkap Uçlu Vida Ø5.5X50 mm SELF DRILLING SCREWS	FS35-M5.5X50		100 ad / paket

AKSESUAR ACCESSORY	STOK KODU REFERENCE CODE	AKSESUAR ADI DESCRIPTION	AKSESUAR KODU PRODUCT CODE		PAKET PACK
	AKS9333	DIN7981 Ø5.5X54 mm YSB Başlı Matkap Uçlu Vida Ø5.5X54 mm SELF DRILLING SCREWS	FS35-M5.5X54		100 ad / paket

CEPHE MAKASI MONTAJ ÖLÇÜLERİ
FRICTION STAY ASSEMBLY DIMENSIONS

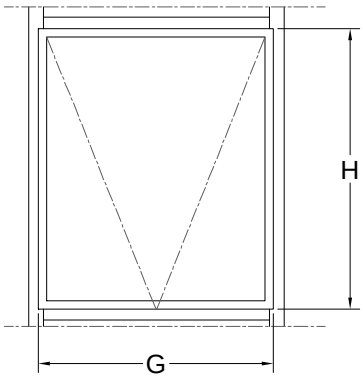

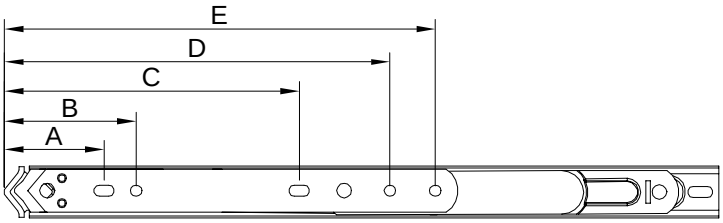

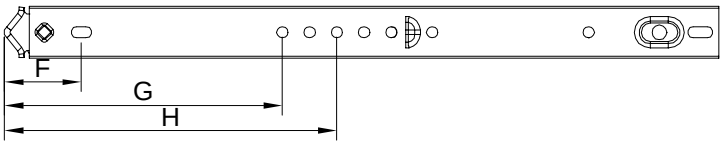

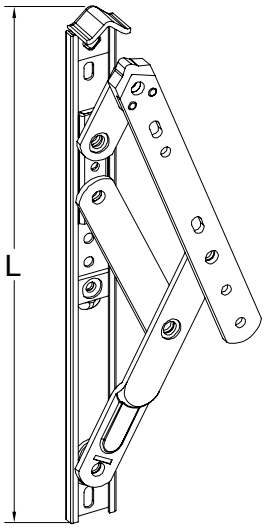

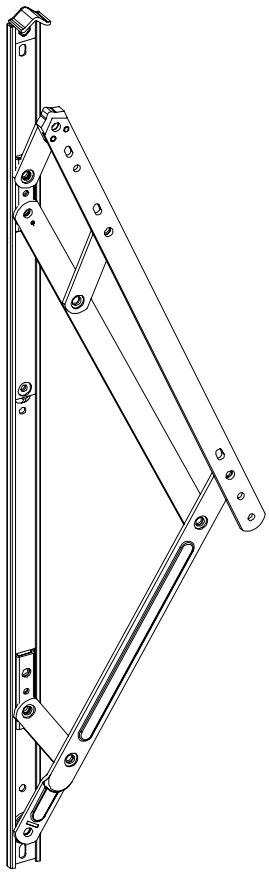

MONTAJ ÖLÇÜLERİ (mm) INSTALLAYION DIMENSIONS (mm)											TEKNİK PARAMETRELER TECHNICAL PARAMETERS			
STOK KODU REFERENCE CODE	MAKAS BOYU (L) TRUSS SIZE	A	B	C	D	E	F	G	H	I	MAKS AÇMA DERECESİ MAX OPENING ANGLE	MAKS YÜKSEKLİK MAX HEIGHT	MAKS GENİŞLİK MAX WIDTH	MAKS AĞIRLIK MAX WEIGHT
AKS646	10"	47	61	106	146	167	34	95	119	250	30°	700 mm	1200 mm	50 kg
AKS647	12"	44	58	130	170	190	34	189	258	307	30° / 35°	800 mm	1200 mm	60 kg
AKS648	14"	45	59	155	195	216	34	192	295	343	30° / 35°	1000 mm	1300 mm	70 kg
AKS649	16"	44	58	188	227	248	34	309	355	403	25° / 30°	1200 mm	1400 mm	85 kg
AKS650	18"	43	57	98	221	261	33	x	399	446	25° / 30°	1400 mm	1400 mm	100 kg
AKS651	20"	44	58	99	249	289	34	318	453	501	20° / 25°	1600 mm	1500 mm	130 kg
AKS652	22"	44	58	99	279	319	34	364	499	547	20° / 25°	1700 mm	1500 mm	135 kg
AKS653	24"	44	58	99	300	340	34	410	545	593	20° / 25°	1800 mm	1500 mm	140 kg
AKS654	28"	44	58	99	363	403	34	515	650	698	20°	2000 mm	1500 mm	155 kg

KANAT KİLİTLEME AKSESUARLARI
SASH LOCKING ACCESSORIES

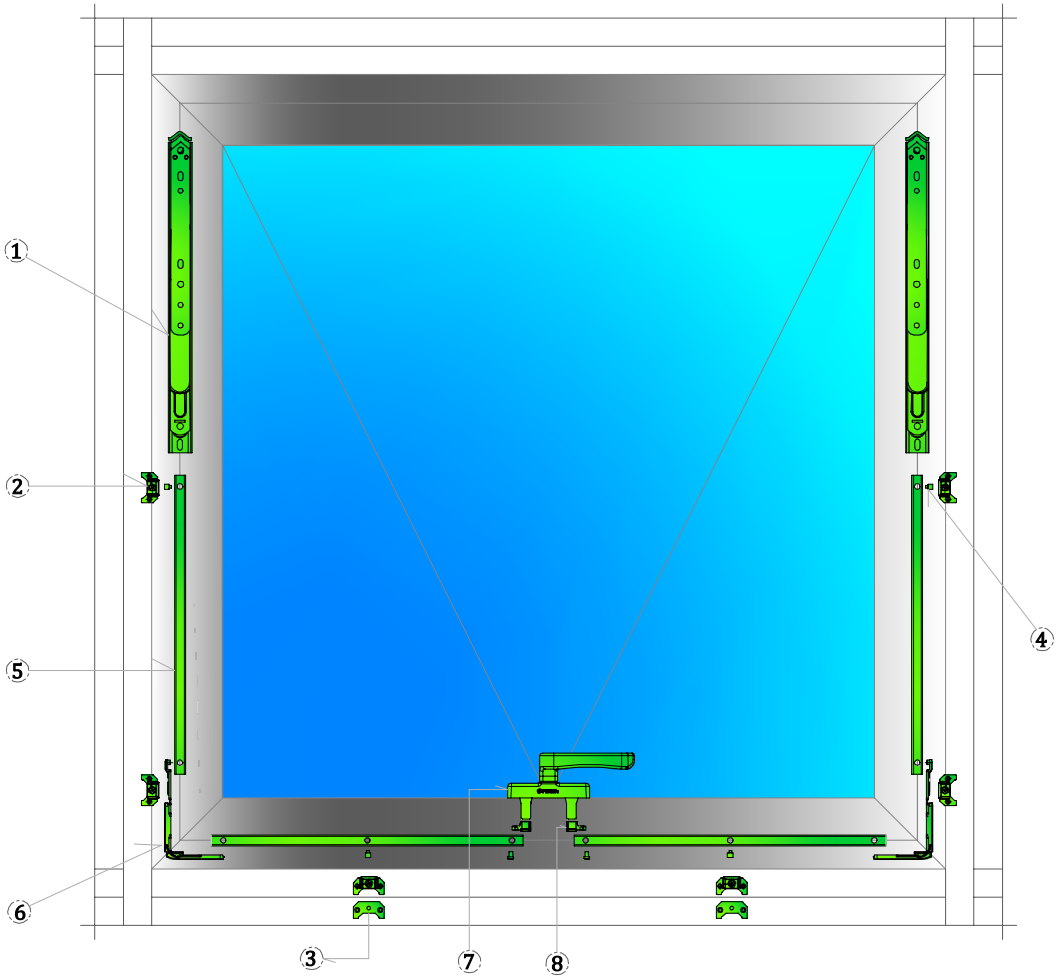

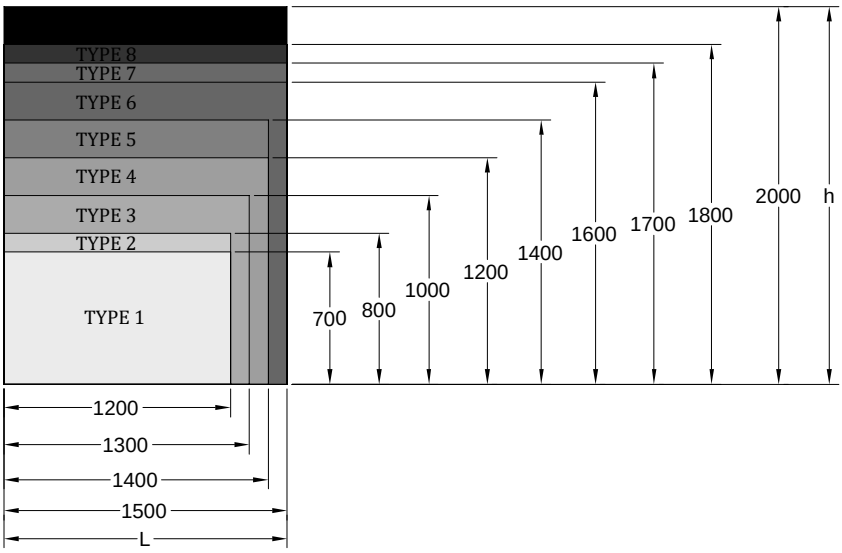

TİP TYPE	MAKAS ARM	CEPHE KOLU HANDLE	KOL BAĞLANTISI CONNECTION ROD	KARŞILIK STRIKER	KARŞILIK+ALT DESTEK PARÇASI STRIKER+ BOTTOM FEED	PİM PIN	ÜST KİLİTLEME BURGLAR BOLT	KÖŞE AKTARIM CORNER TRANFER
1	AKS646	1 adet	2 adet		2 adet	2 adet		
2	AKS647	1 adet	2 adet		2 adet	2 adet		
3	AKS648	1 adet	2 adet	2 adet	2 adet	2 adet	1 adet	2 adet
4	AKS649	1 adet	2 adet	2 adet	2 adet	2 adet	2 adet	2 adet
5	AKS650	1 adet	2 adet	4 adet	4 adet	4 adet	2 adet	2 adet
6	AKS651	1 adet	2 adet	4 adet	4 adet	6 adet	3 adet	2 adet
7	AKS652	1 adet	2 adet	6 adet	4 adet	8 adet	3 adet	2 adet
8	AKS653	1 adet	2 adet	8 adet	4 adet	10 adet	3 adet	2 adet
9	AKS654	1 adet	2 adet	10 adet	6 adet	14 adet	4 adet	2 adet

Slim Facade System

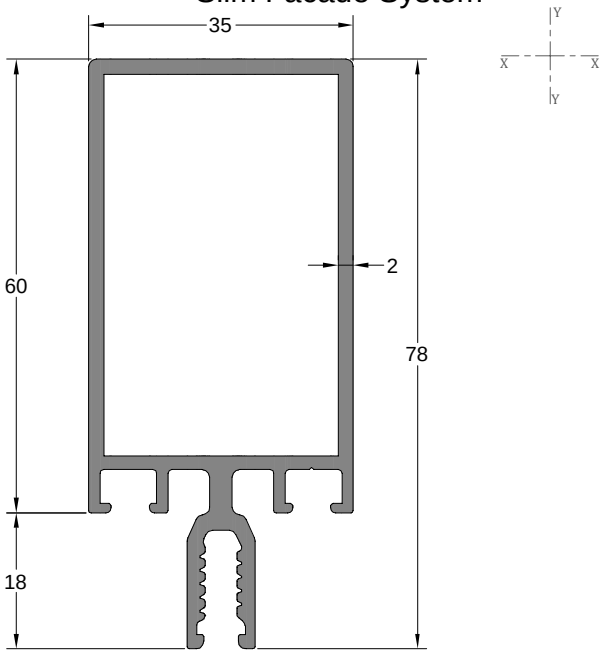

Düşey Profili VERTICAL PROFILE	Profil Kodu Profile Code	(kg/mt) Weight	Jx cm^4	Jy cm^4
	14596	1,283	27,37	7,61

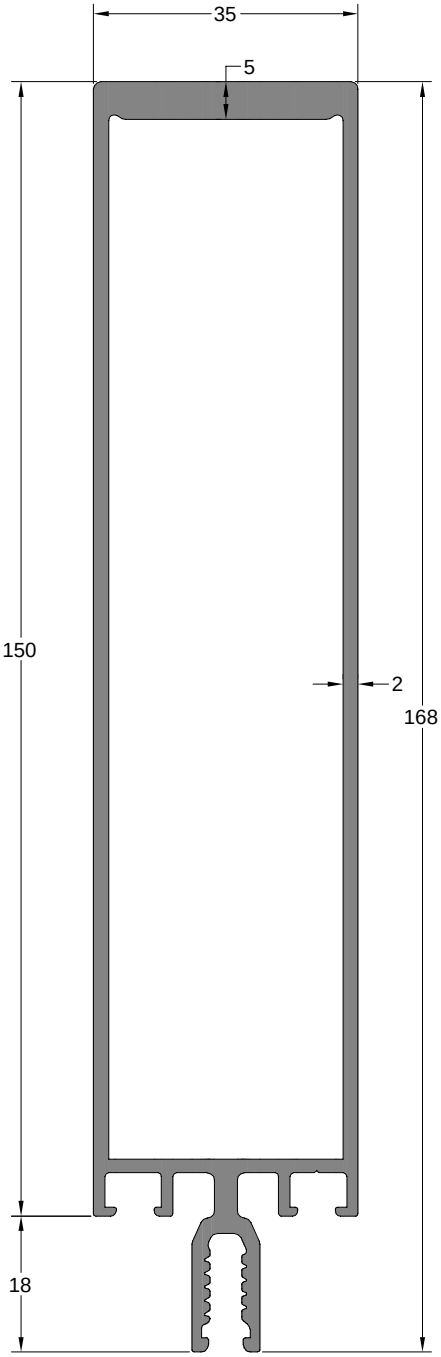

Düşey Profili VERTICAL PROFILE	Profil Kodu Profile Code	(kg/mt) Weight	Jx cm^4	Jy cm^4
	14594	2,506	292,83	18,14

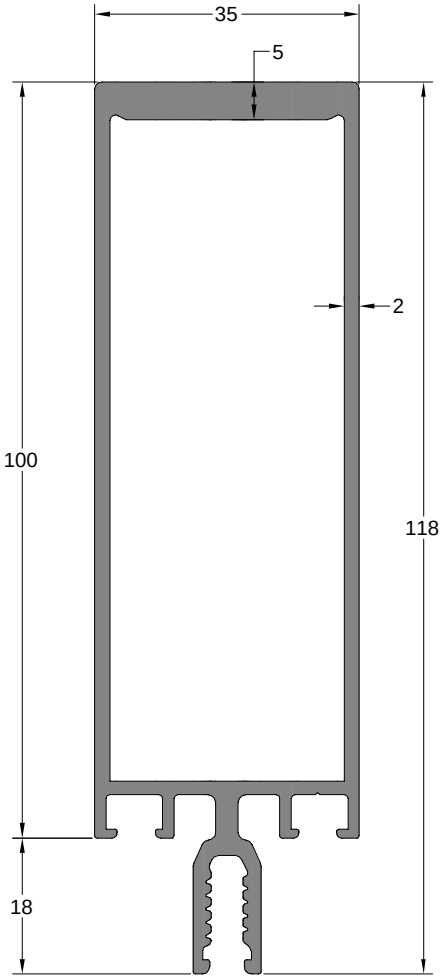

Düşey Profili VERTICAL PROFILE	Profil Kodu Profile Code	(kg/mt) Weight	Jx cm^4	Jy cm^4
	14595	1,964	113,42	12,68

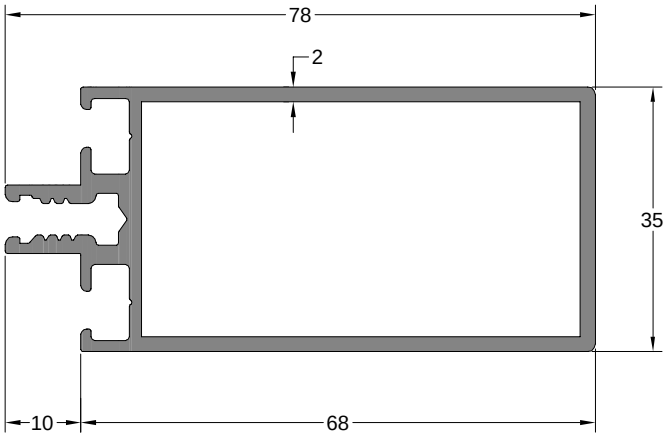

Yatay Profili HORIZONTAL PROFILE	Profil Kodu Profile Code	(kg/mt) Weight	Jx cm^4	Jy cm^4
	14597	1,292	8,40	30,66

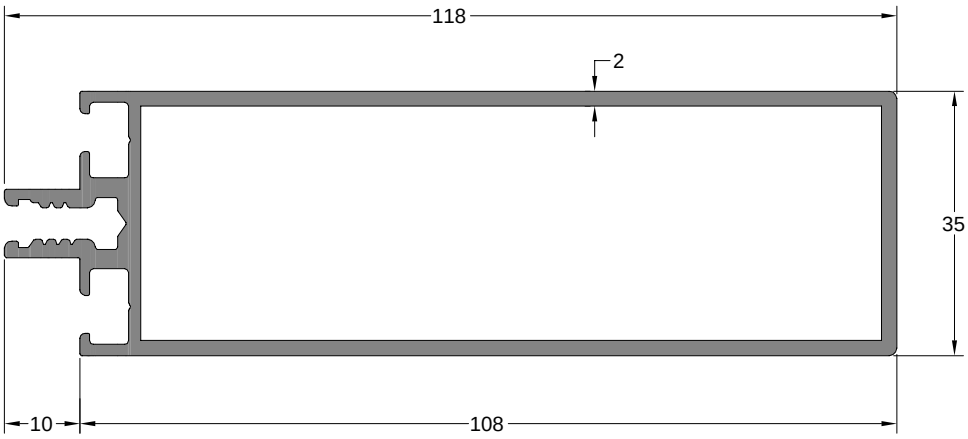

Yatay Profili HORIZONTAL PROFILE	Profil Kodu Profile Code	(kg/mt) Weight	Jx cm^4	Jy cm^4
	14598	1,725	12,77	95,19

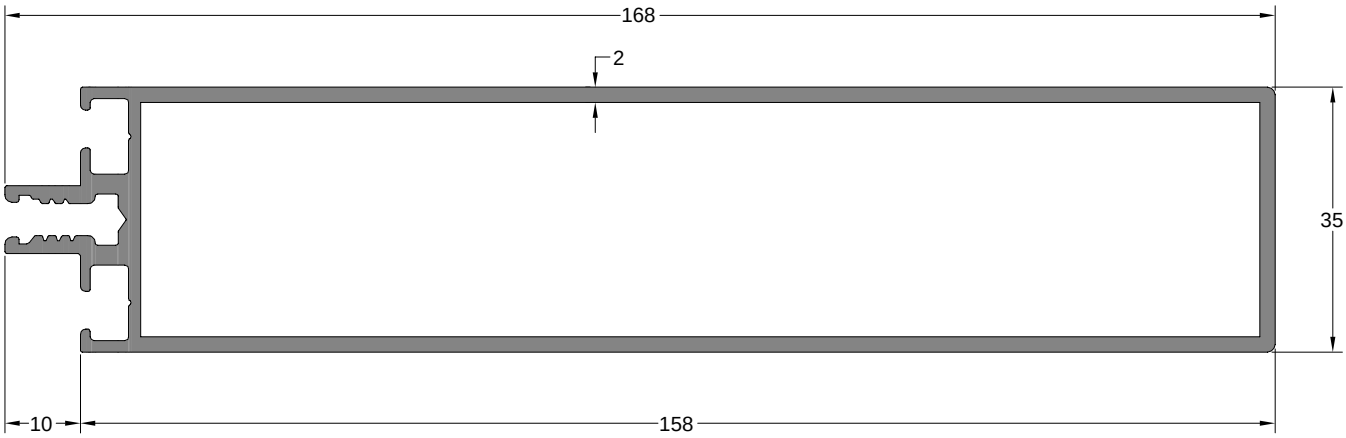

Yatay Profili HORIZONTAL PROFILE	Profil Kodu Profile Code	(kg/mt) Weight	Jx cm^4	Jy cm^4
	14599	2,267	18,22	248,73

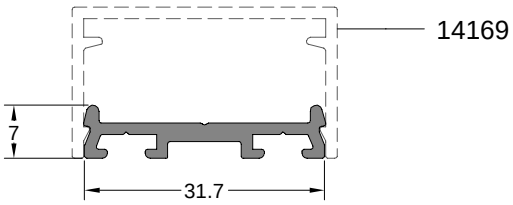

Kapak Altı Baskı Profili COVER UNDER EXTENSION PROFILE	Profil Kodu Profile Code	(kg/mt) weight
	14600	0,246

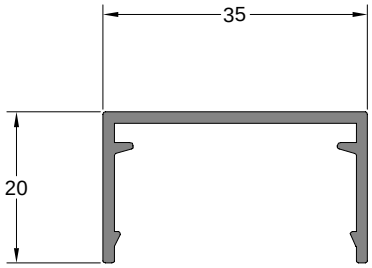

Kapak Profili COVER PROFILE	Profil Kodu Profile Code	(kg/mt) Weight
	14169	0,311

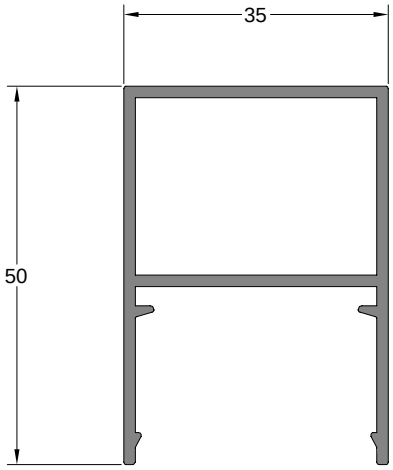

Kapak Profili COVER PROFILE	Profil Kodu Profile Code	(kg/mt) Weight
	14168	0,686

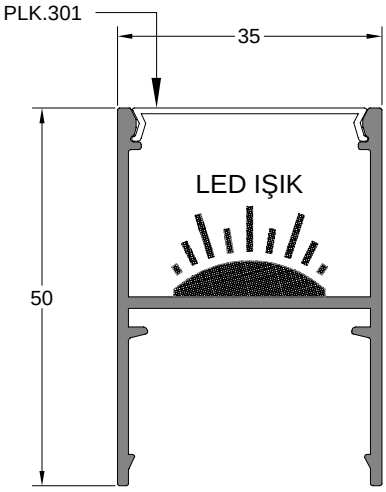

Led Uygulamalı Kapak Profili LED APPLICATION COVER PROFILE	Profil Kodu Profile Code	(kg/mt) Weight
	14167	0,583

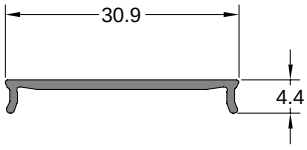

Led Kapak Profili LED COVER PROFILE	Profil Kodu Profile Code	(kg/mt) Weight
	14163	0,122

Slim Facade System

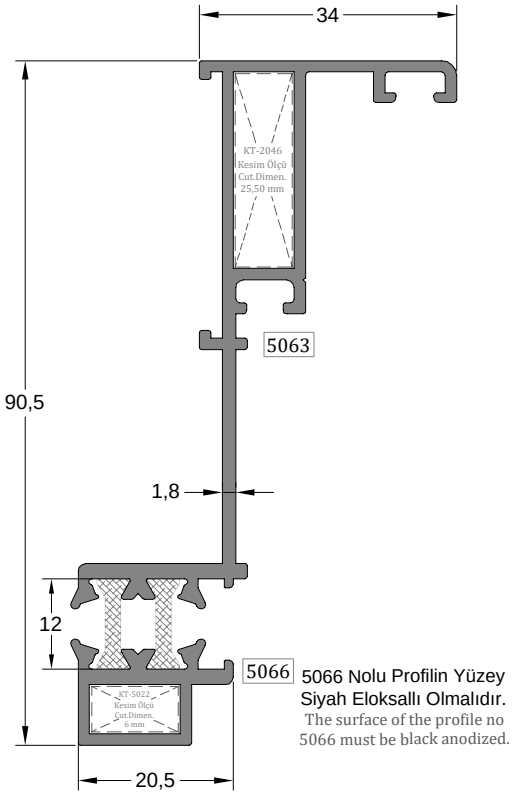

5066 Nolu Profilin Yüzey Siyah Eloksallı Olmalıdır.
The surface of the profile no 5066 must be black anodized.

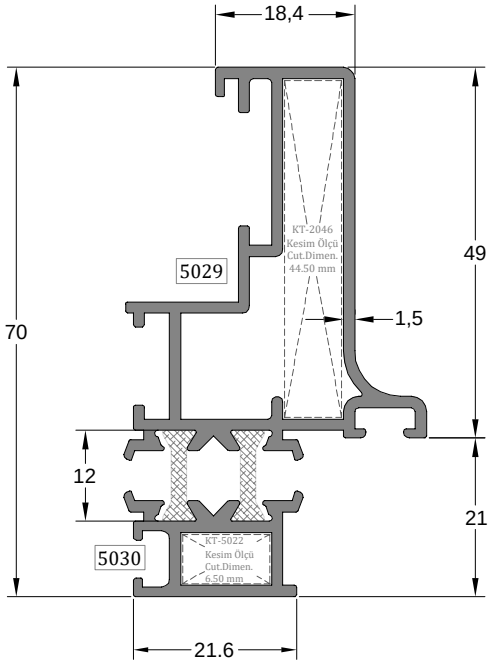

Kapaklı Cephe içi Kasa Profili COVERED FACADE FRAME PROFILE	Profil Kodu Profile Code	(kg/mt) Weight	Jx cm^4	Jy cm^4
	5063-5066	1,251	41,99	5,40

Yalıtımlı Kaset Profili INSULATED CASETTE PROFILE	Profil Kodu Profile Code	(kg/mt) Weight	Jx cm^4	Jy cm^4
	5029-5030-12	1,250	20,07	4,50

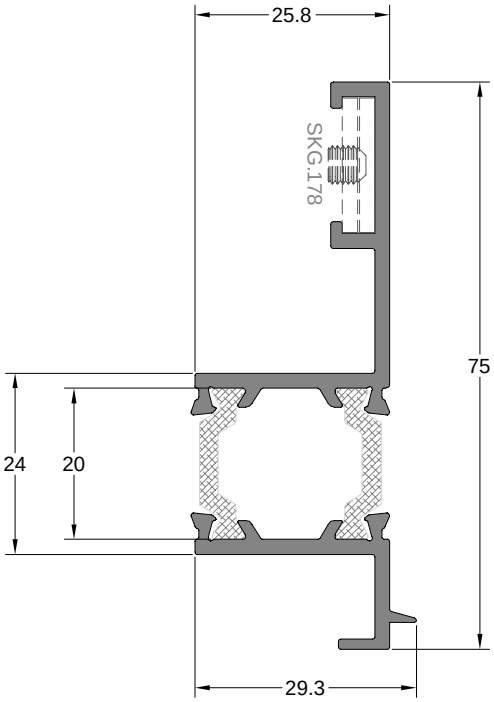

Sistem Geçiş Adaptör Profili SYSTEM TRANSITION ADAPTER PROFILE	Profil Kodu Profile Code	(kg/mt) Weight	Jx cm^4	Jy cm^4
	13108-13109	0,918	14,47	3,32

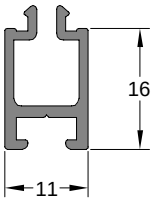

Yükseltme Çıta Profili EXTENSION BEAD PROFILE	Profil Kodu Profile Code	(kg/mt) Weight
	5097	0,198

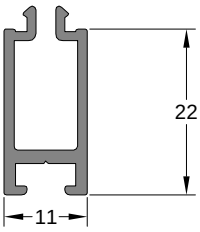

Yükseltme Çıta Profili EXTENSION BEAD PROFILE	Profil Kodu Profile Code	(kg/mt) Weight
	13102	0,250

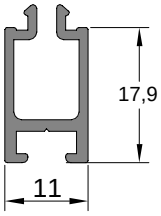

Yükseltme Çıta Profili EXTENSION BEAD PROFILE	Profil Kodu Profile Code	(kg/mt) Weight
	5059	0,210

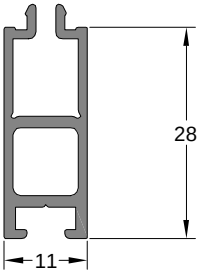

Yükseltme Çıta Profili EXTENSION BEAD PROFILE	Profil Kodu Profile Code	(kg/mt) Weight
	13103	0,309

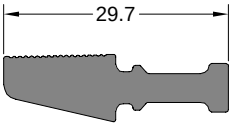

Cam Altı Takoz Profili SUB-GLAZING WEDGE PROFILE	Profil Kodu Profile Code	(kg/mt) Weight
	14601	0,464

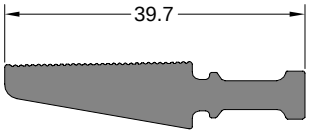

Cam Altı Takoz Profili SUB-GLAZING WEDGE PROFILE	Profil Kodu Profile Code	(kg/mt) Weight
	14602	0,614

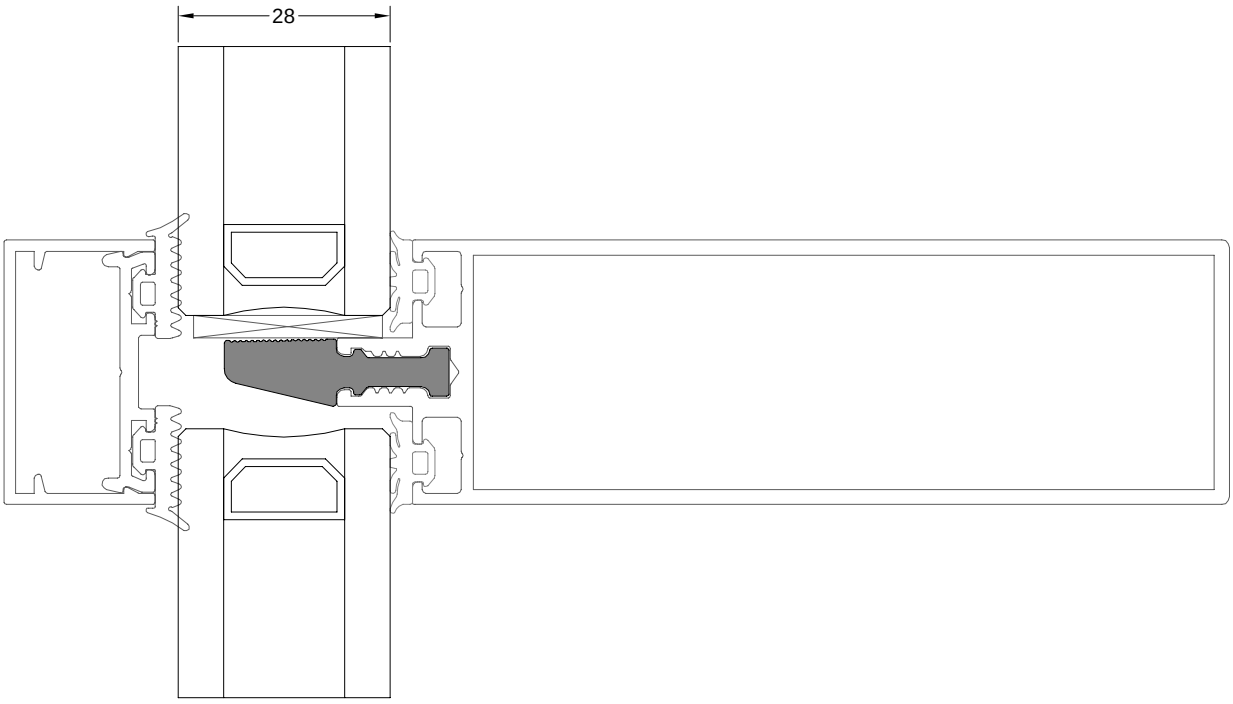

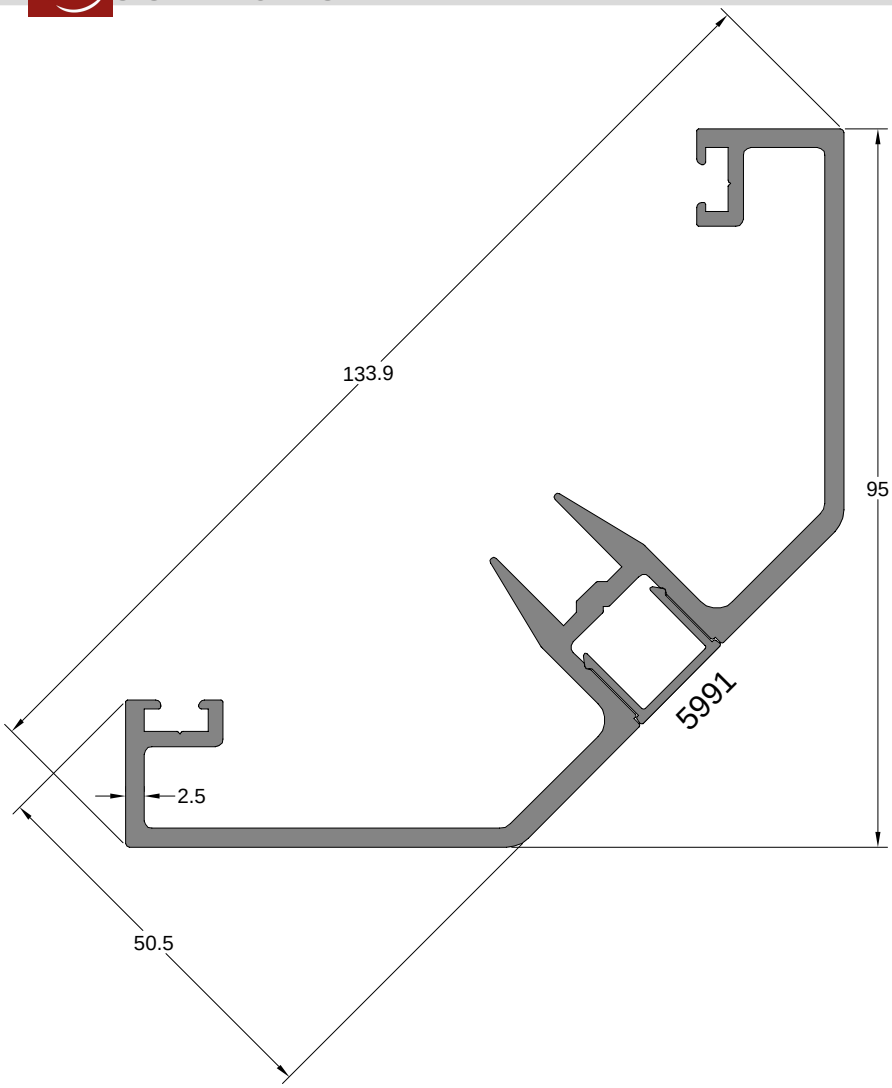

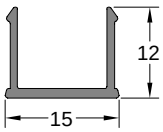

90° Dıştan Köşe Dönüş Kapak Profili 90° CORNER COVER PROFILE	Profil Kodu Profile Code	(kg/mt) Weight
	13091	1,950

Kapak Profili COVER PROFILE	Profil Kodu Profile Code	(kg/mt) Weight
	5991	0,108

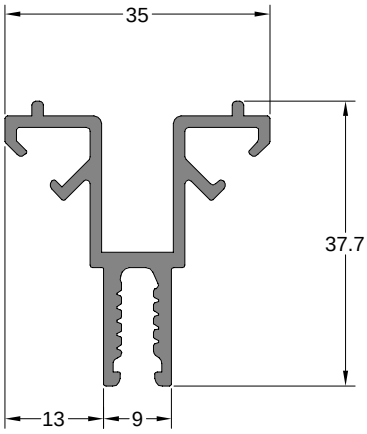

90° Dıştan Köşe Dönüş Kapak Profili 90° CORNER COVER PROFILE	Profil Kodu Profile Code	(kg/mt) Weight
	14603	0,590

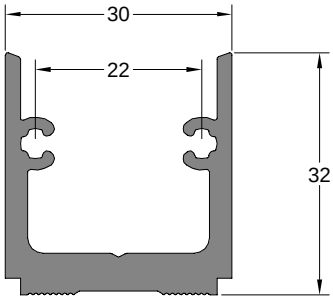

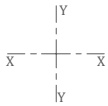

YATAY DİLATASYON PROFİLİ KESİM ÖLÇÜLERİ
CUT DİMENSIENS FOR HORIZONTAL PROFİLE

Yatay Bağlantı Profili CONNECTION PROFILE FOR HORIZONTAL	Profil Kodu Profile Code	(kg/mt) Weight
	14604	0,843

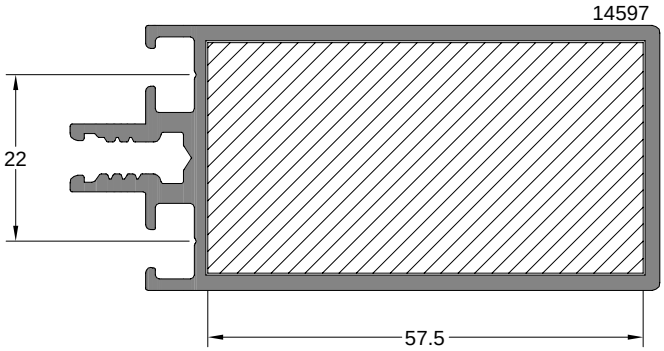

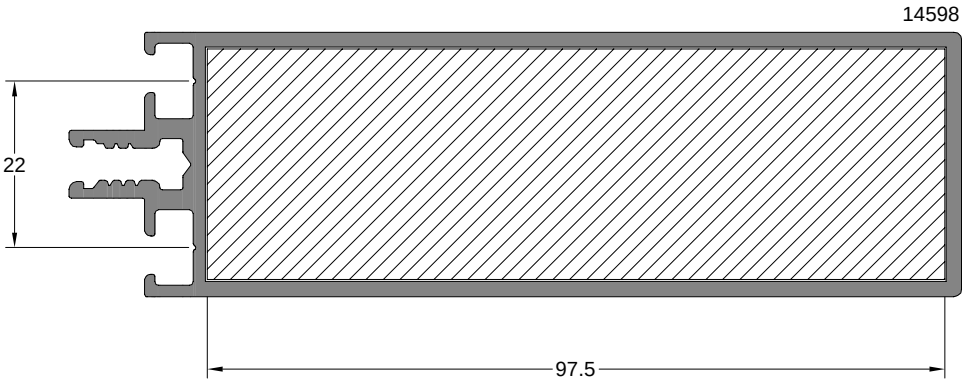

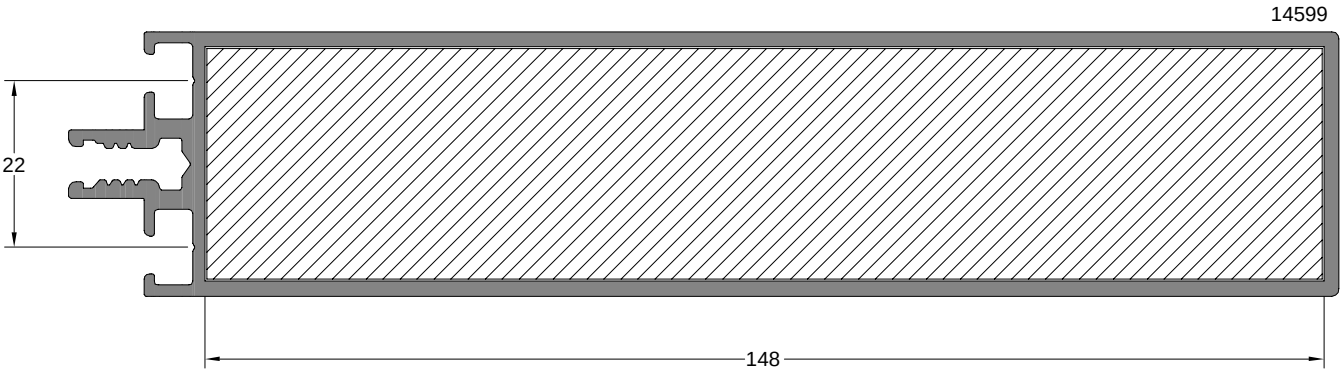

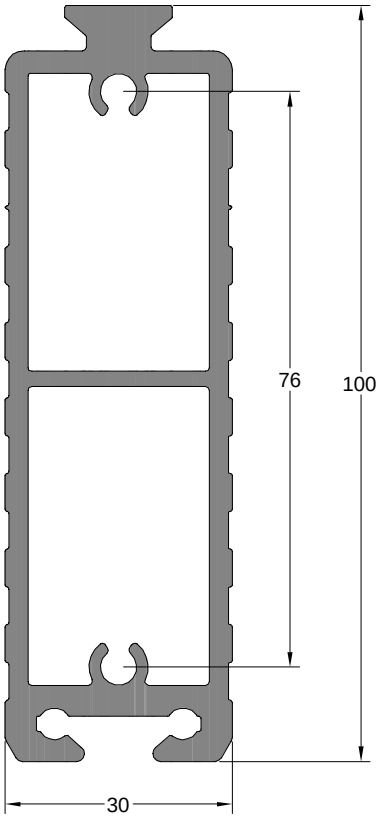

DÜŞEY DİLATASYON PROFİLİ KESİM ÖLÇÜLERİ
CUT DİMENSIENS FOR VERTICAL PROFİLE

Düşey Bağlantı Profili CONNECTION PROFILE FOR VERTICAL	Profil Kodu Profile Code	(kg/mt) Weight
	14605	2,386

14594

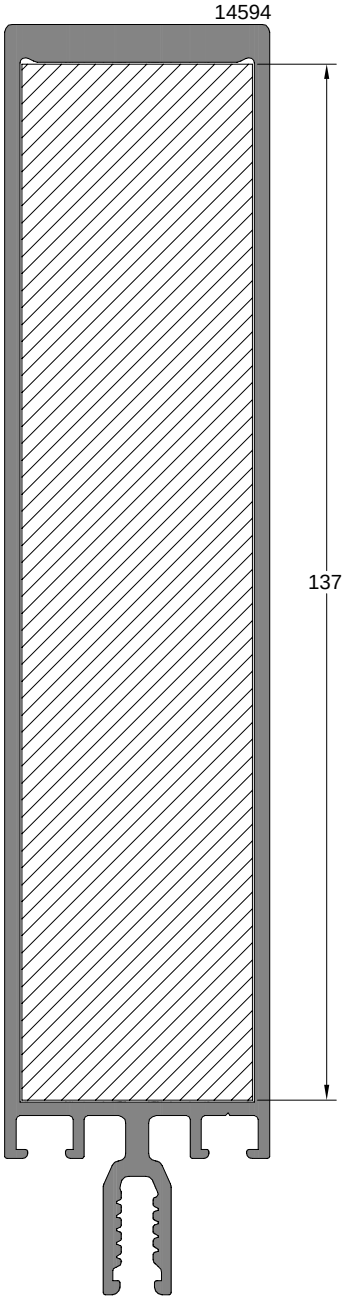

14595

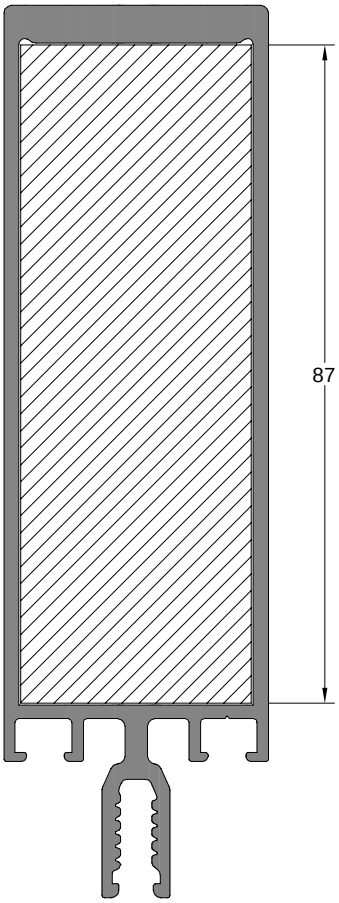

14596

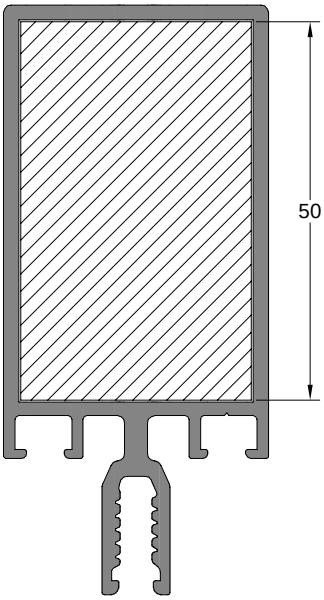

HARMONY 35 KAPAKLI CEPHE DETAILS

HARMONY 35 COVERED FACADE DETAILS

KAPAKLI CEPHE DÜŞEY DETAYI
COVERED FACADE VERTICAL DETAIL

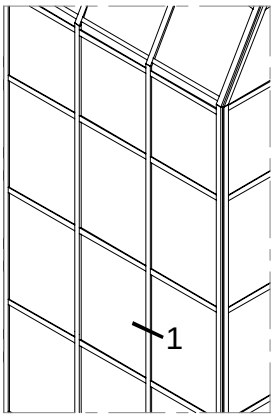

İÇ
(INSIDE)

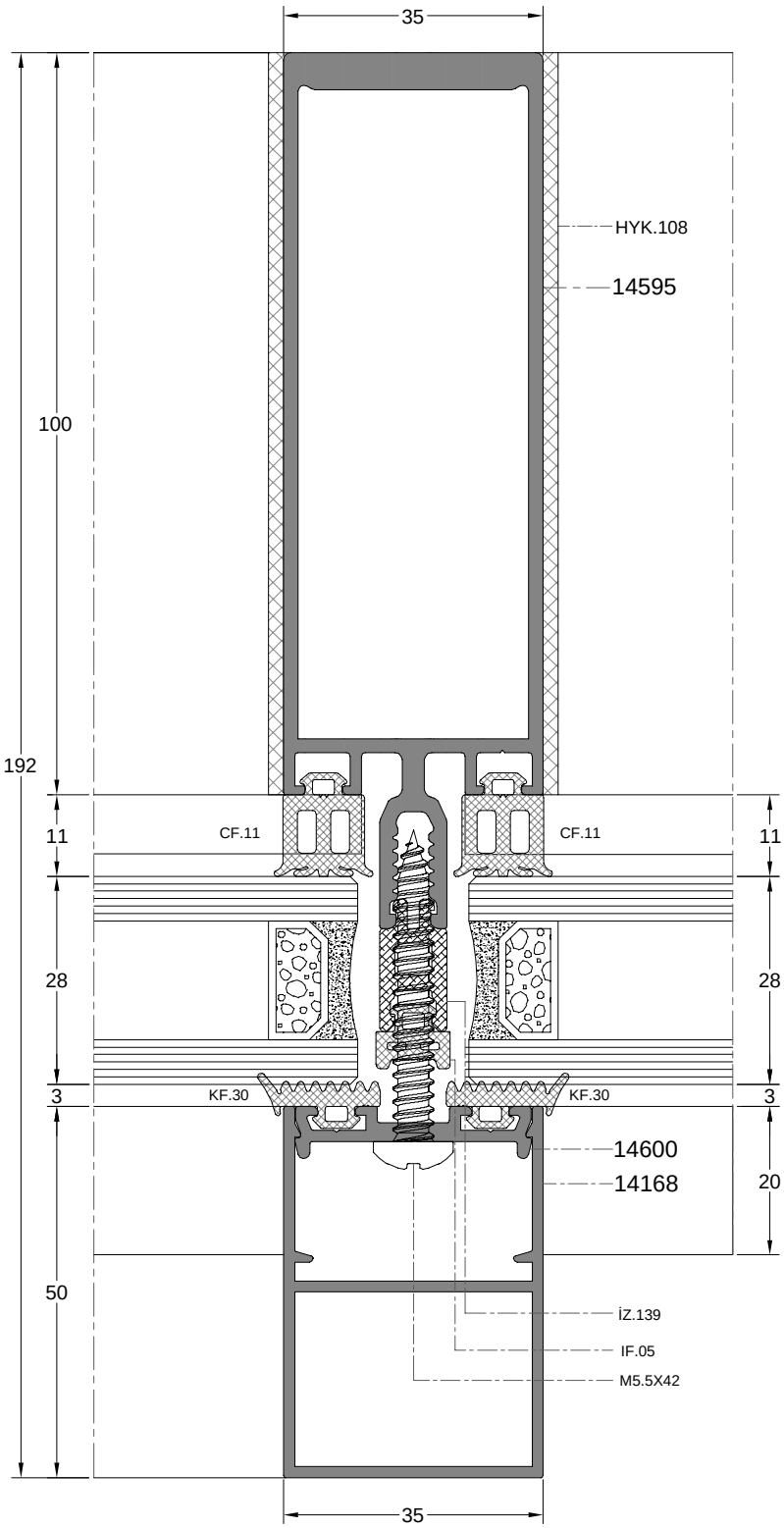

D-1

DIŞ
(OUTSIDE)

KAPAKLI CEPHE YATAY DETAYI
COVERED FACADE HORIZONTAL DETAIL

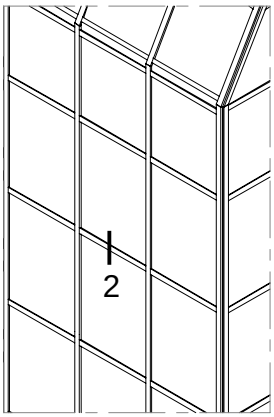

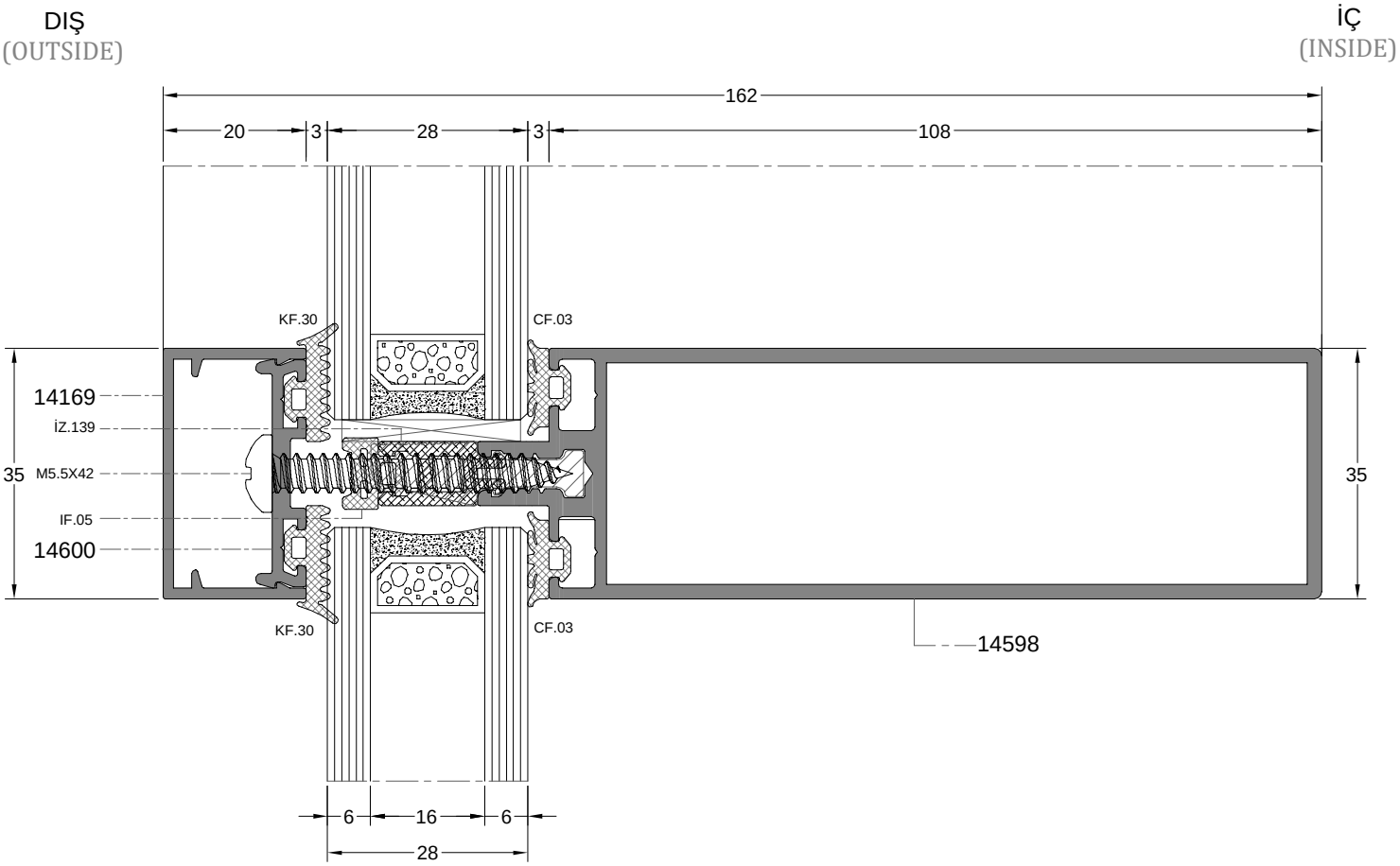

D-2

KAPAKLI CEPHE AÇILIR KANAT DÜŞEY DETAYI
COVERED FACADE OUTWARD OPENING SASH VERTICAL DETAIL

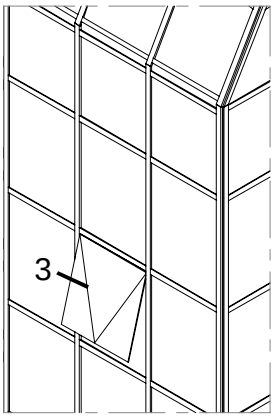

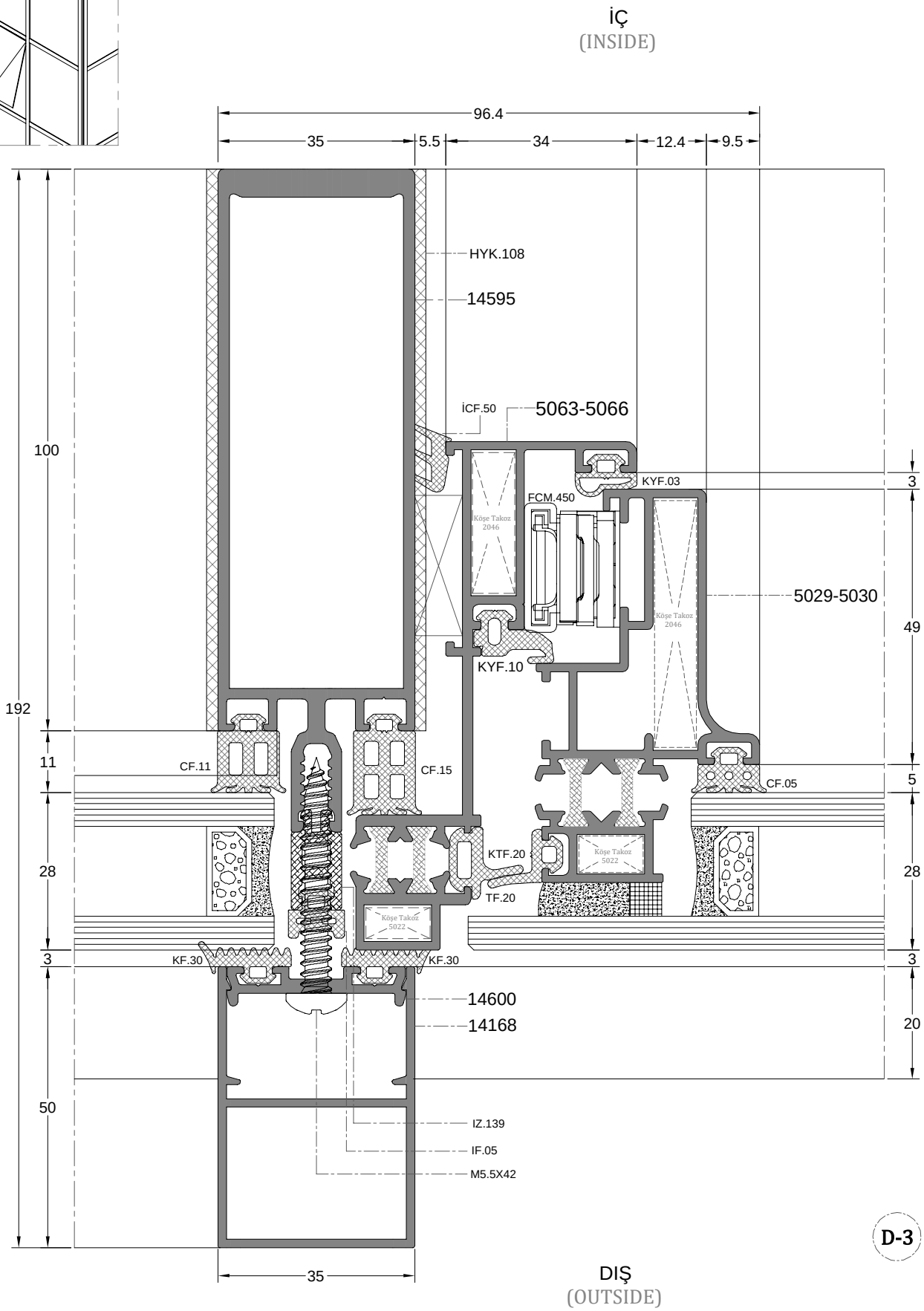

KAPAKLI CEPHE AÇILIR KANAT YATAY DETAYI
COVERED FACADE OUTWARD OPENING SASH HORIZONTAL DETAIL

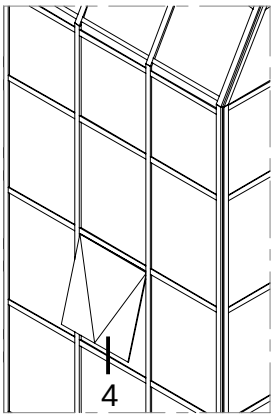

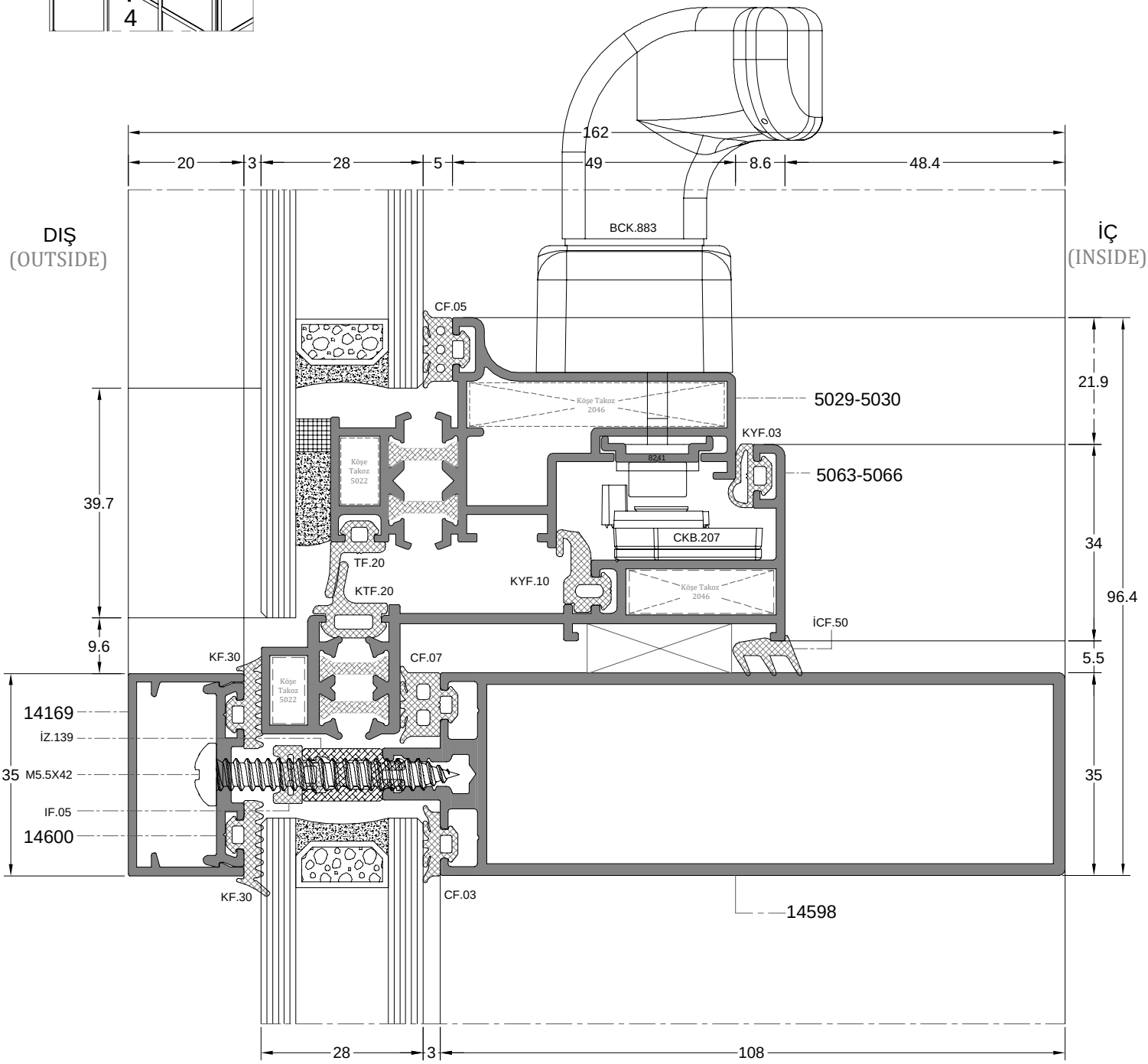

D-4

KAPAKLI CEPHE DUVAR BİRLEŞİM DETAYI
COVERED FACADE WALL JOINT DETAIL

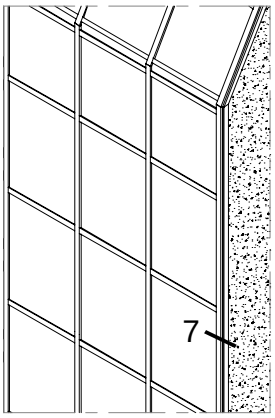

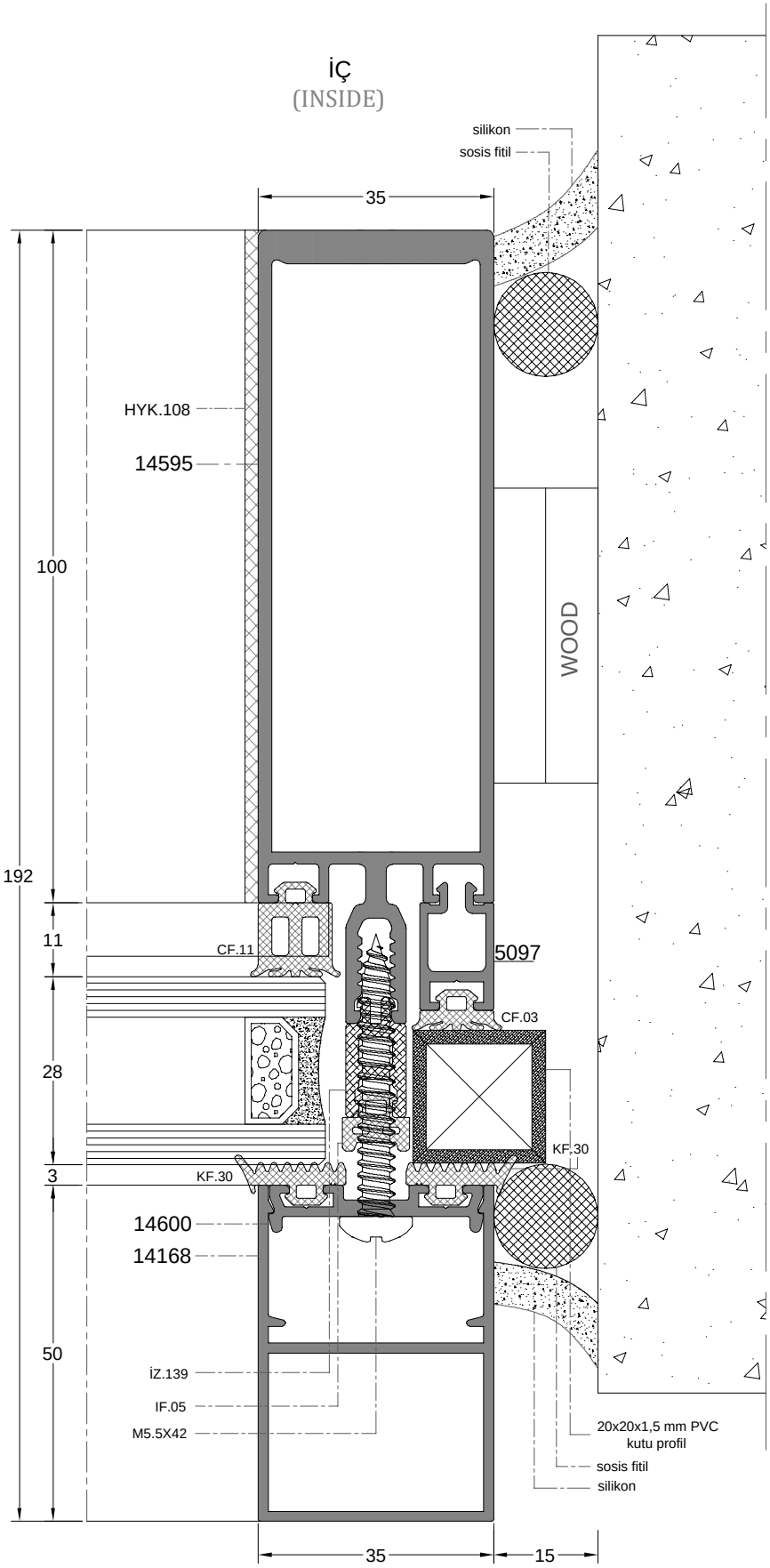

KAPAKLI CEPHE SPANDREL BÖLGE DÜŞEY DETAYI
COVERED FACADE SPANDREL VERTICAL DETAIL

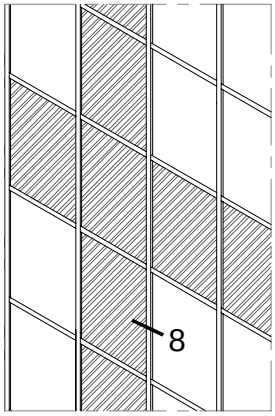

İÇ
(INSIDE)

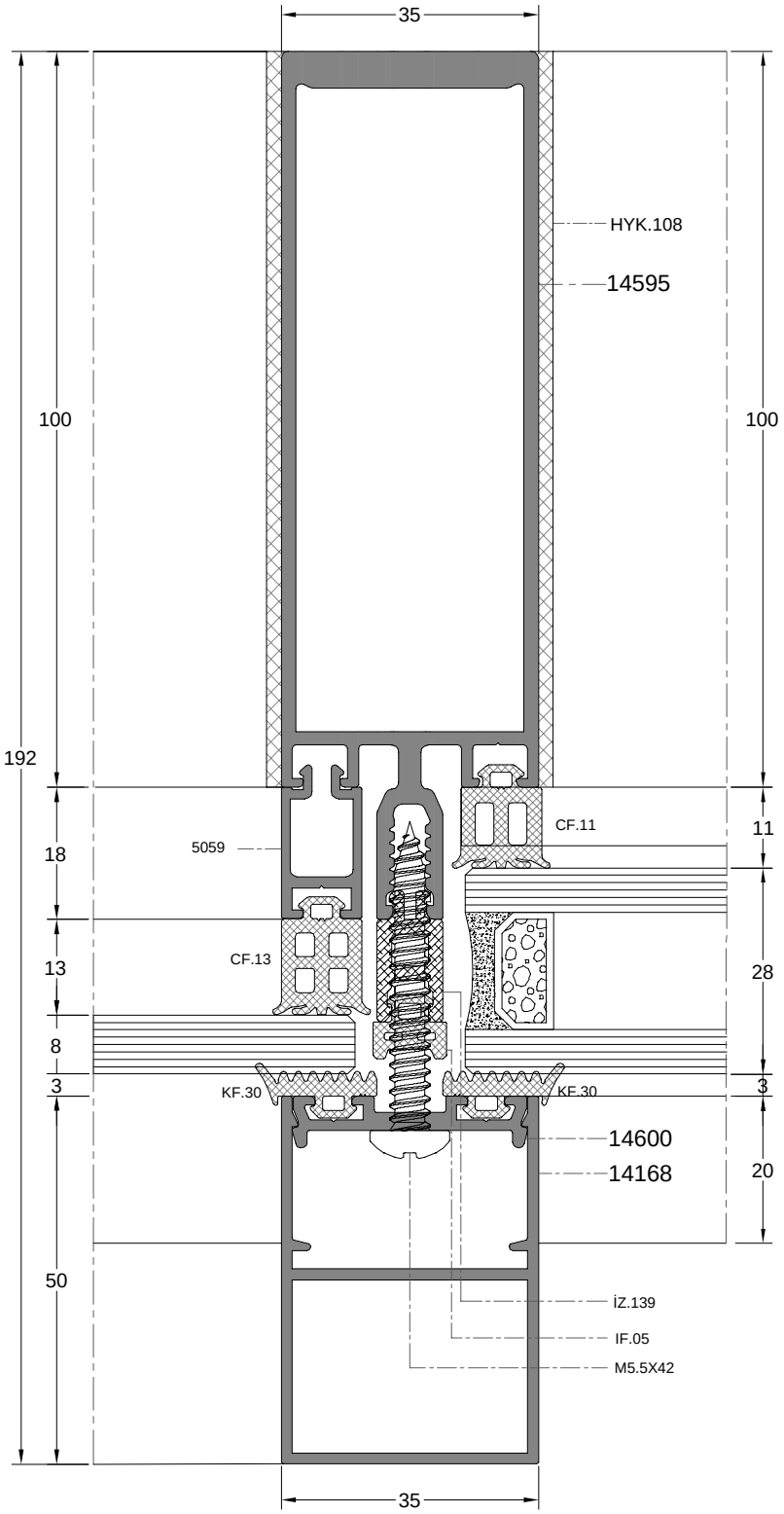

D-8

DIŞ
(OUTSIDE)

KAPAKLI CEPHE SPANDREL BÖLGE YATAY DETAYI
COVERED FACADE SPANDREL HORIZONTAL DETAIL

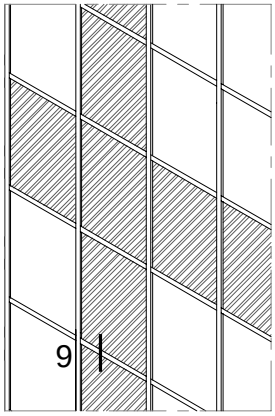

İÇ
(INSIDE)

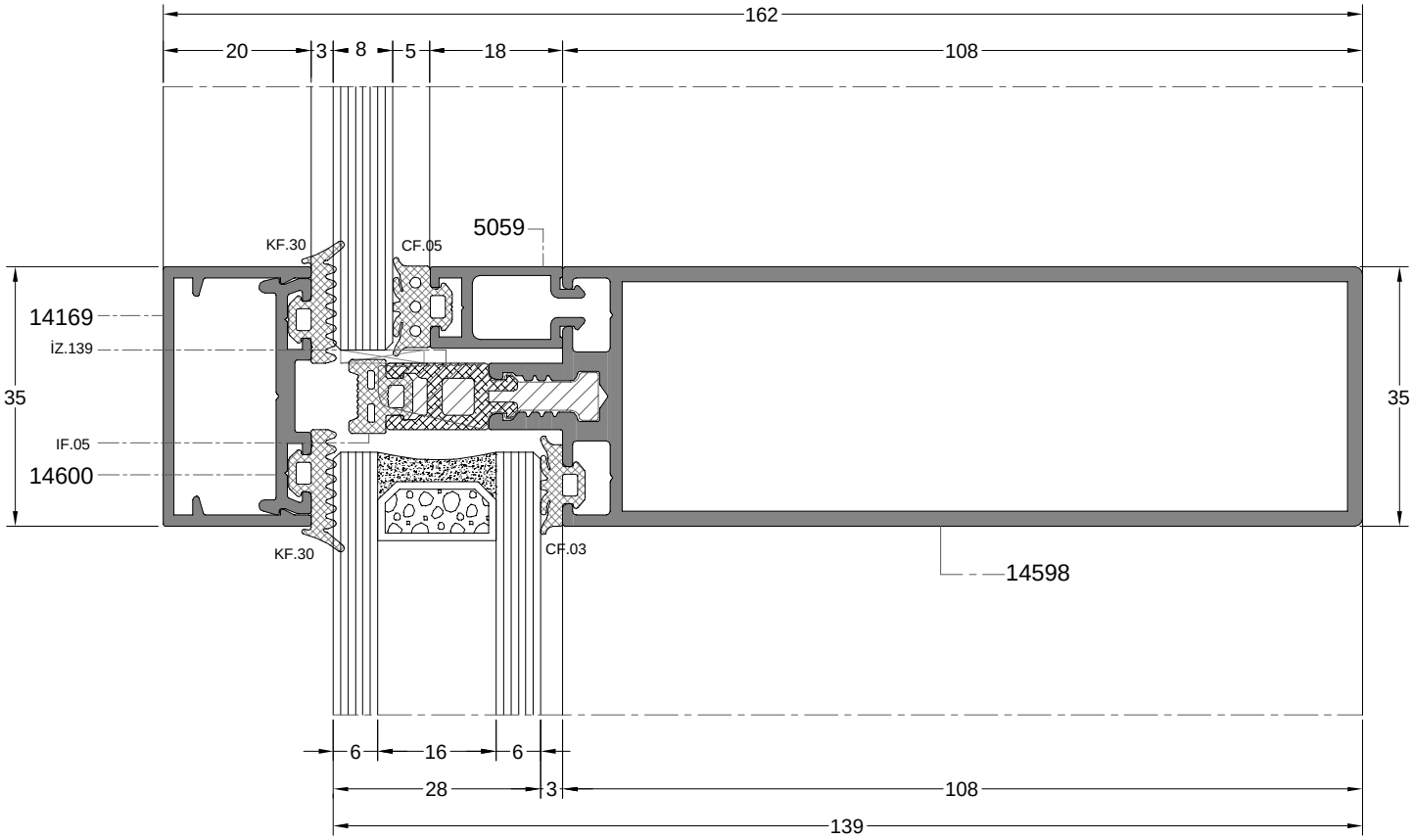

DIŞ
(OUTSIDE)

D-9

Slim Facade System

KAPAKLI CEPHE DETAYI 90 ° DIŞ AÇILI KÖŞE DÖNÜŞ DETAYI

90° OUTWARD ANGLED CORNER COVERED FACADE

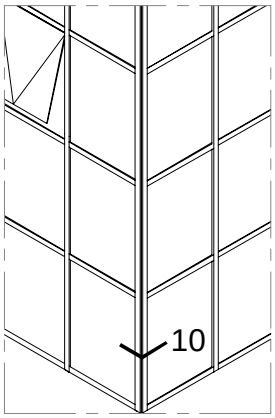

İÇ
(INSIDE)

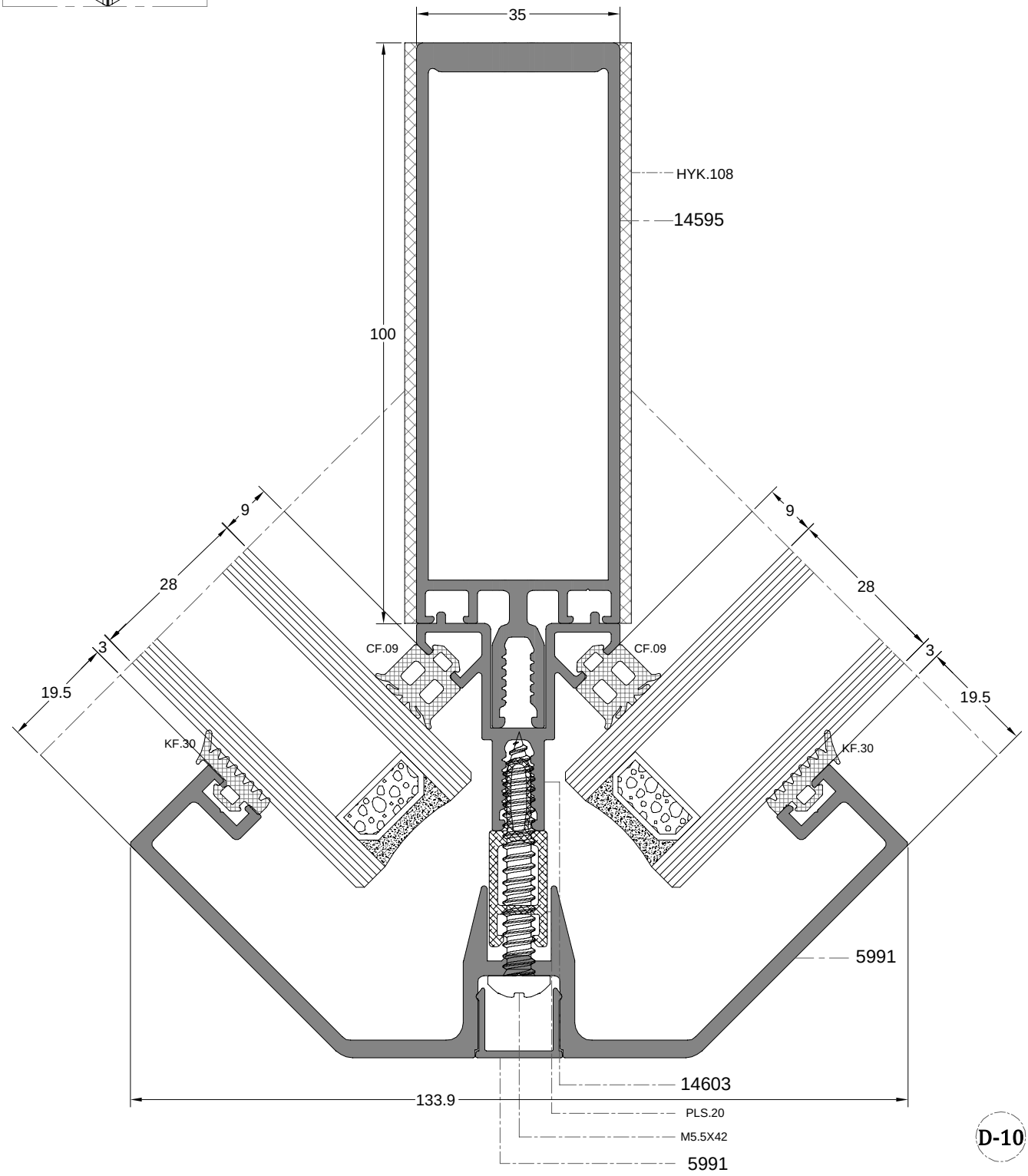

D-10

DIŞ
(OUTSIDE)

KAPAKLI CEPHE WD55T HEMYÜZ KAPI DETAYI
COVERED FACADE WD55T ENTERY DOOR DETAIL

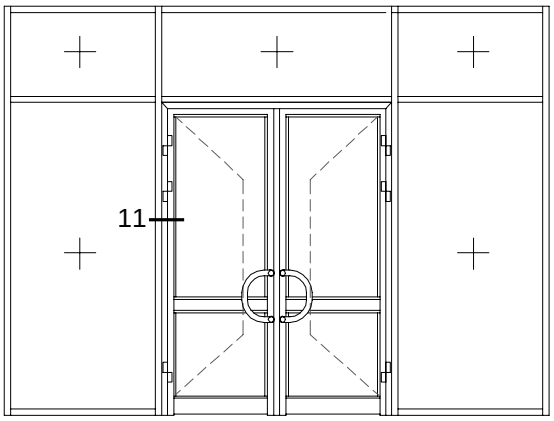

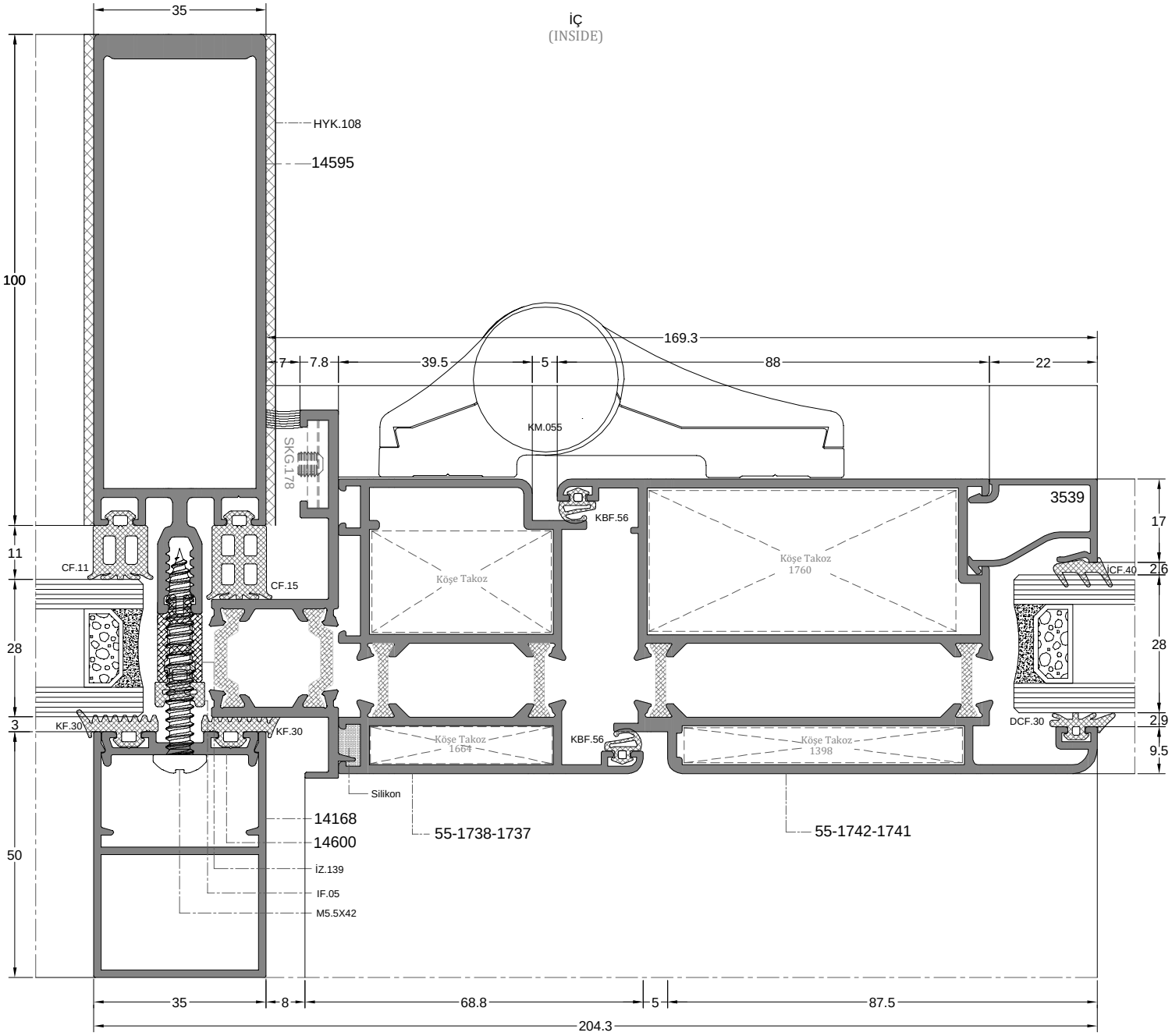

D-11

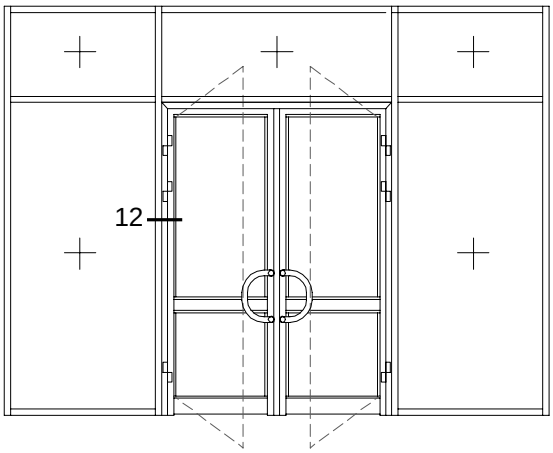

KAPAKLI CEPHE SAPPHIRE ED75 HEMYÜZ KAPI DETAYI
COVERED FACADE SAPPHIRE ED75 ENTERY DOOR DETAIL

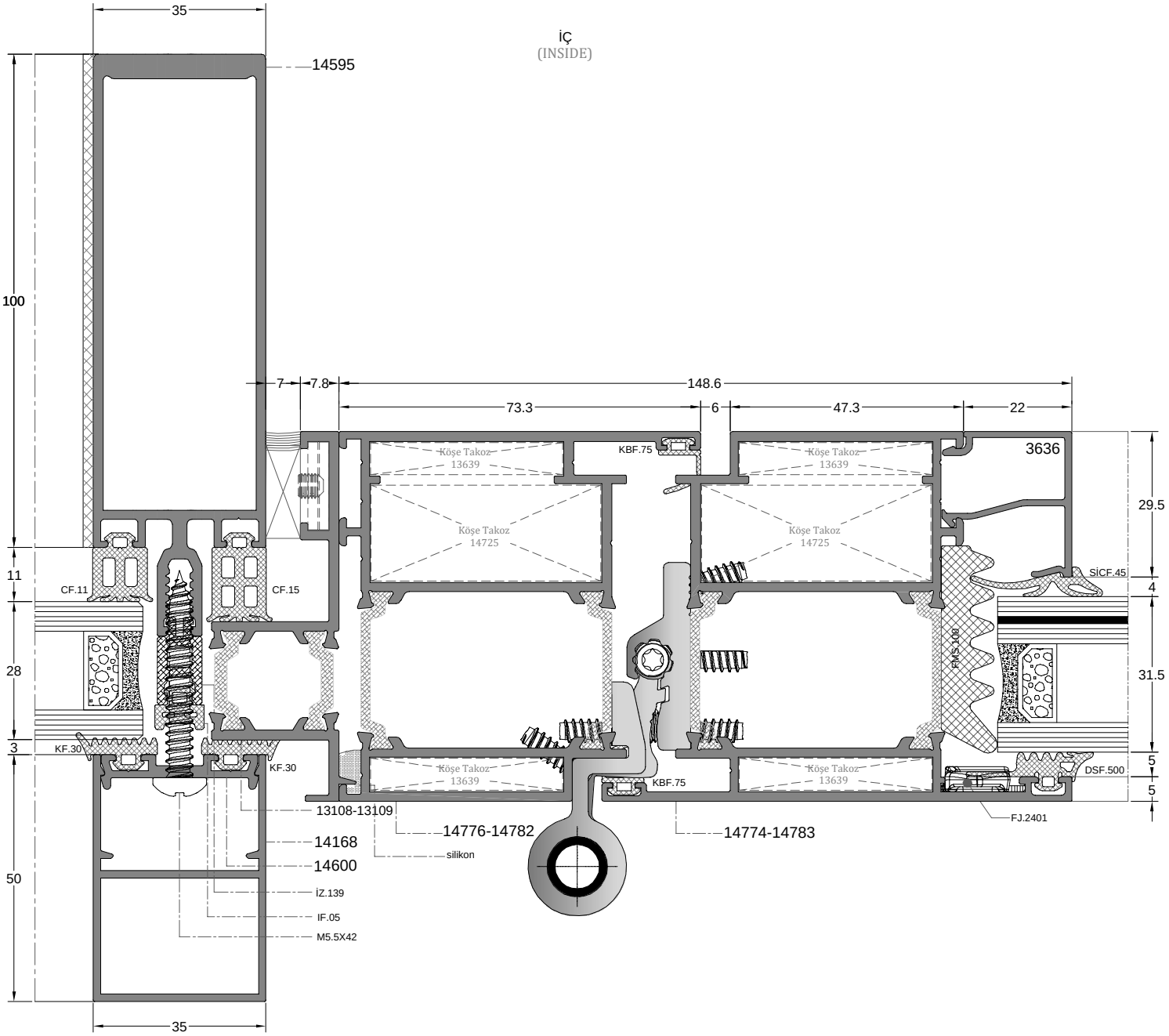

D-12

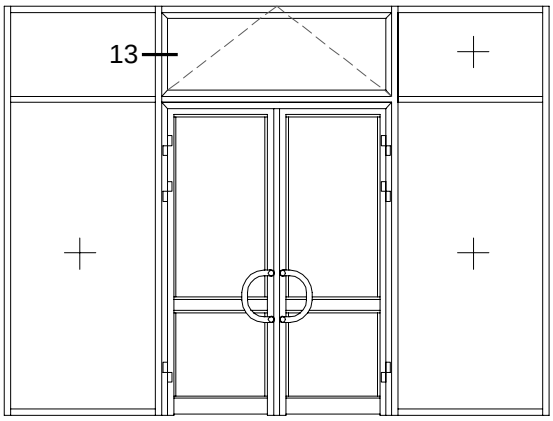

KAPAKLI CEPHE SAPPHIRE 75 PENCERE DETAYI
COVERED FACADE SAPPHIRE 75 WINDOW DETAIL

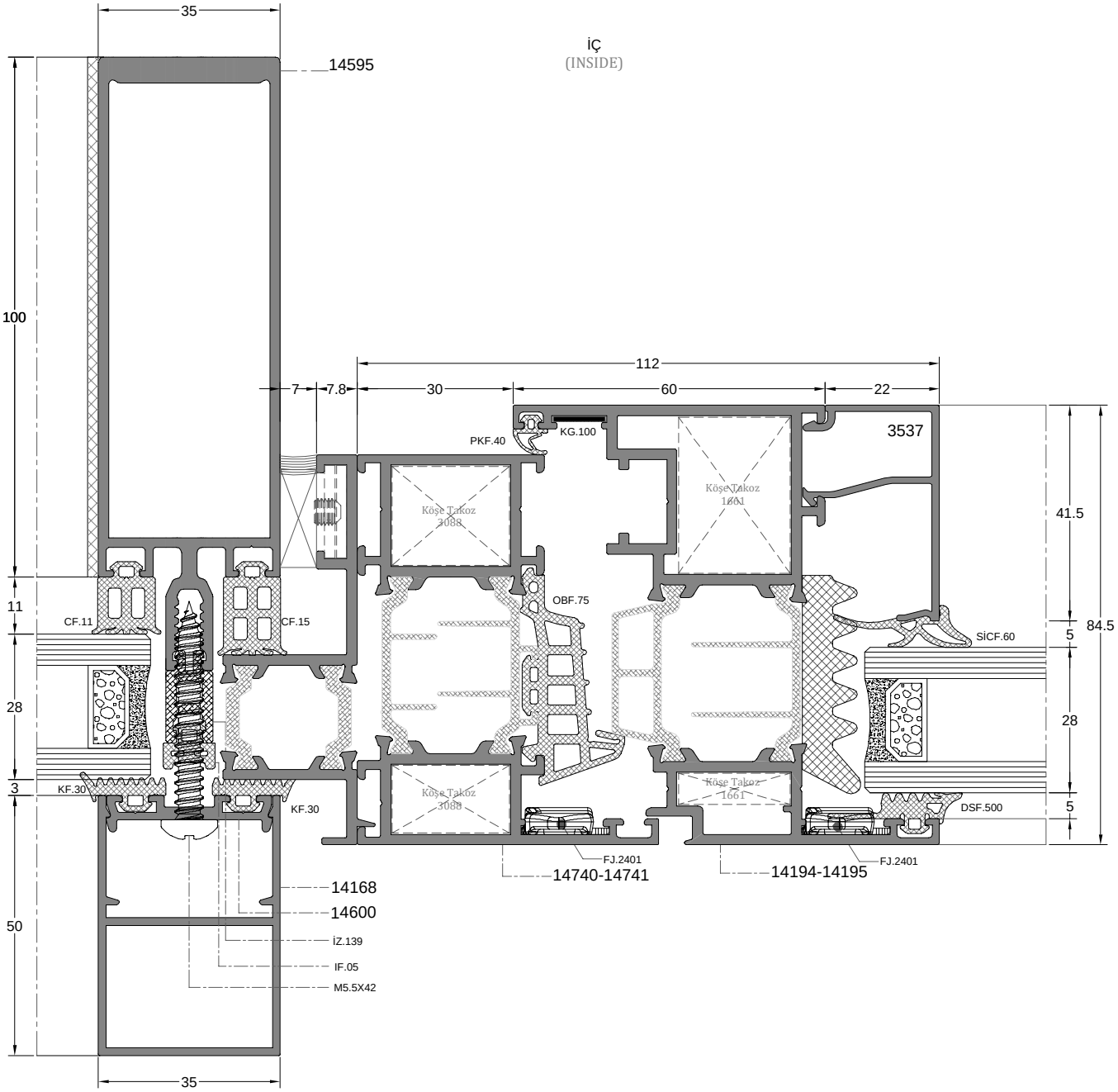

D-13

KAPAKLI CEPHE HS55T KALDIR-SÜR KAPI DETAYI
COVERED FACADE HS55T LİFT-SLİDE DOOR DETAIL

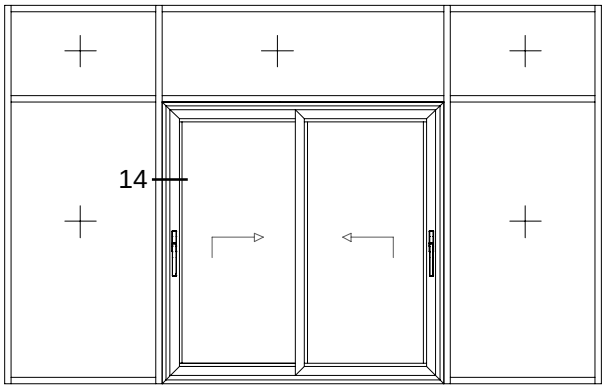

İÇ
(INSIDE)

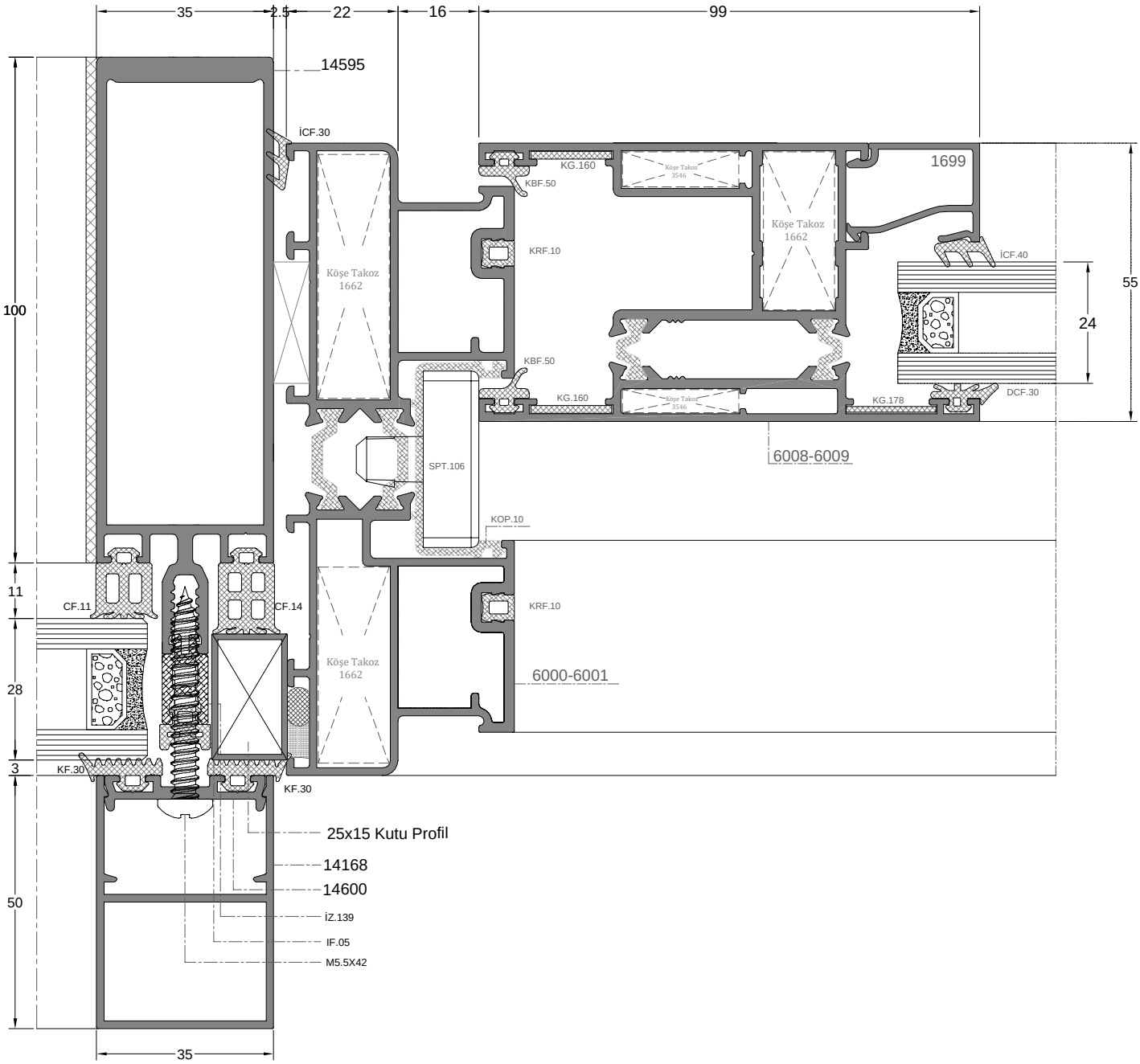

DIŞ
(OUTSIDE)

D-14

KAPAKLI CEPHE S35T NOVOLİNE SÜRME KAPI DETAYI
COVERED FACADE S35T NOVOLINE SLIDING DOOR DETAIL

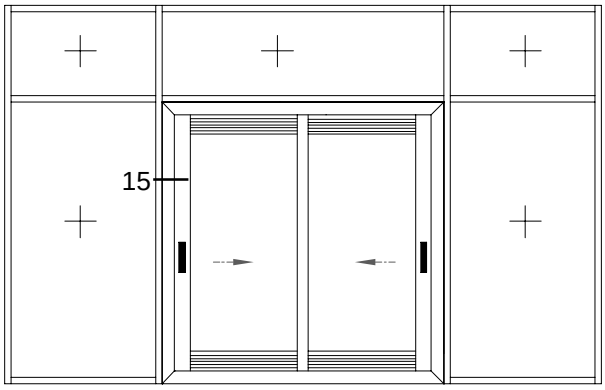

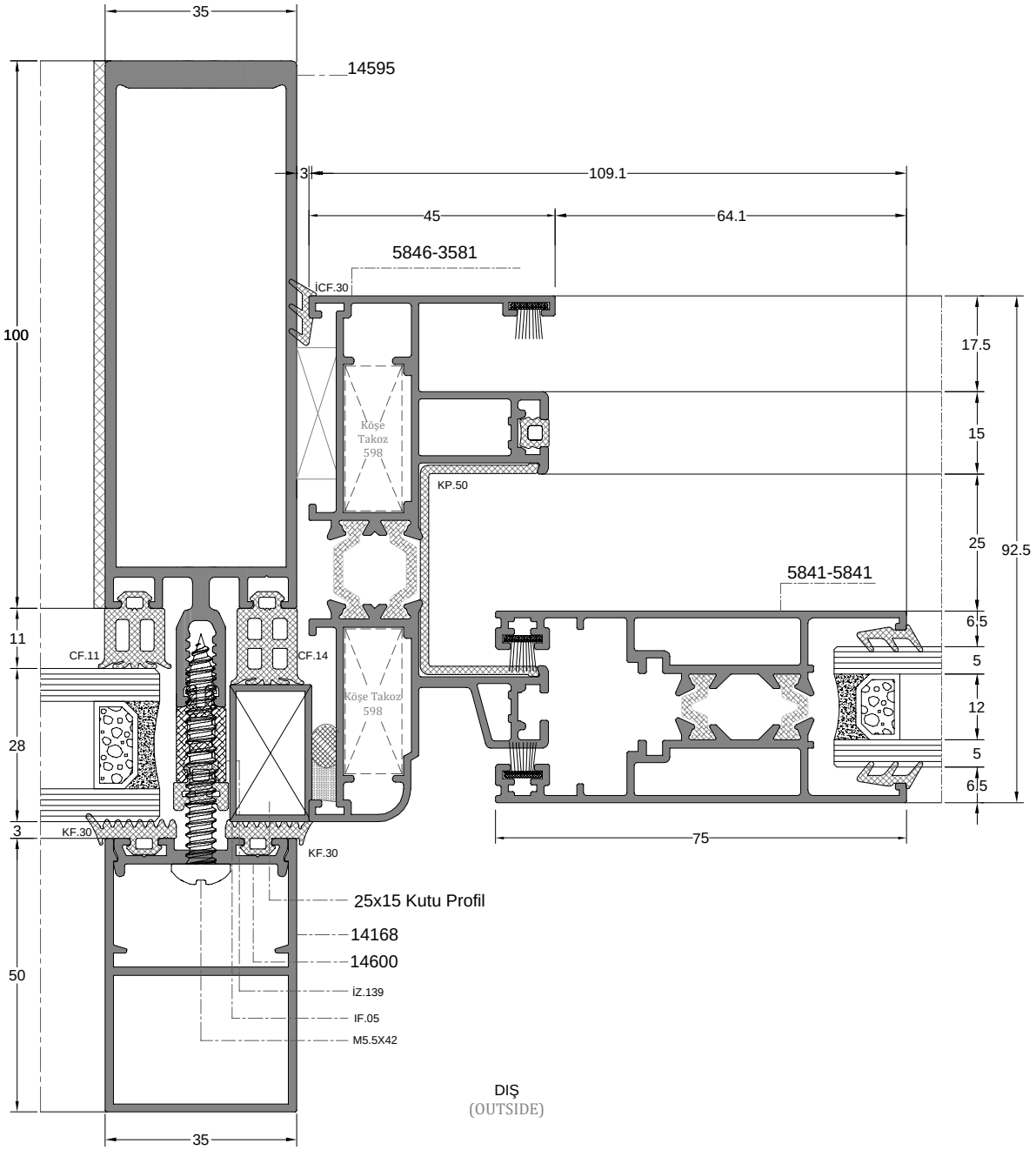

D-15

HARMONY 35 CAM KOMBİNASYONU (SABİT CAMLAR)

HARMONY 35 GLAZING COMBINATIONS (FIXED GLASSES)

DÜŞEY DETAYI
VERTICAL DETAIL

10 MM

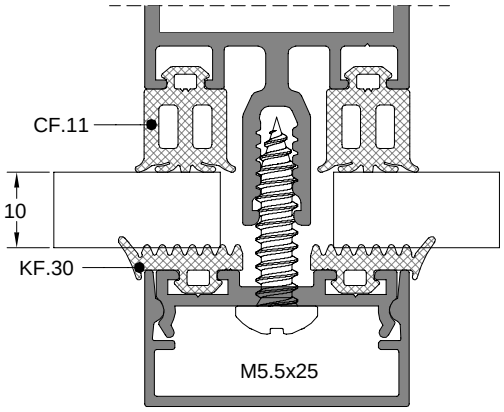

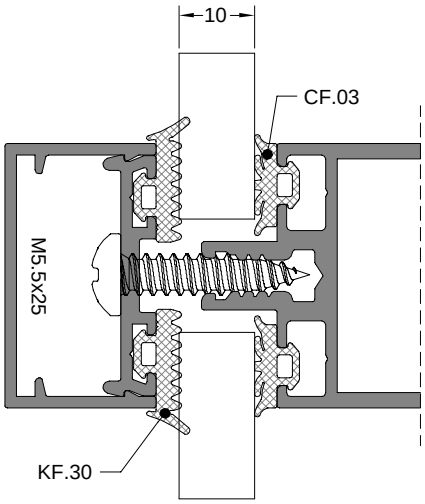

YATAY DETAYI
HORIZONTAL DETAIL

12 MM

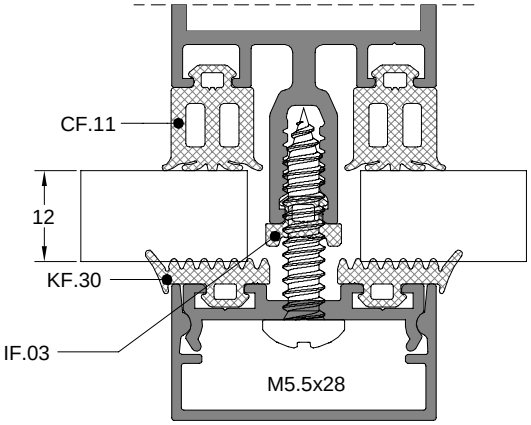

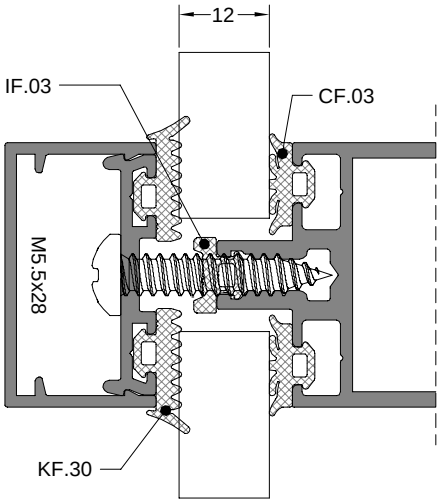

16 MM

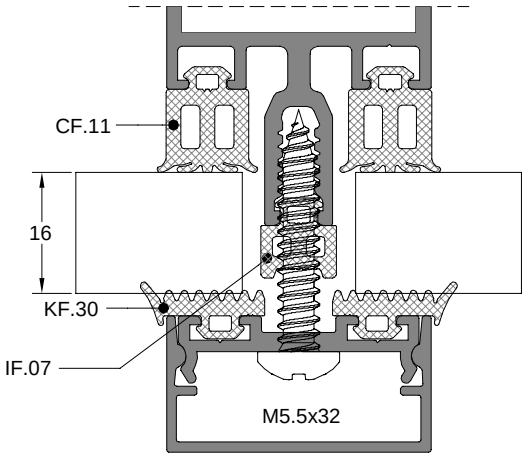

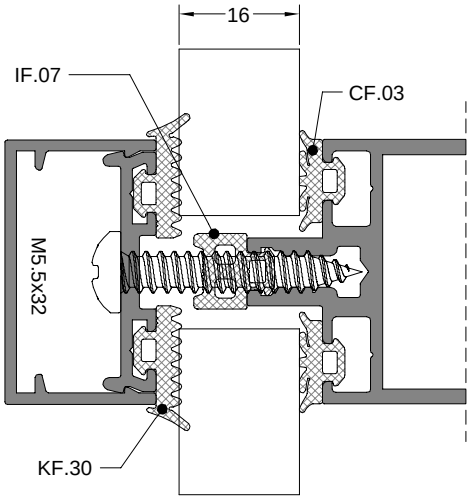

DÜŞEY DETAYI
VERTICAL DETAIL

18 MM

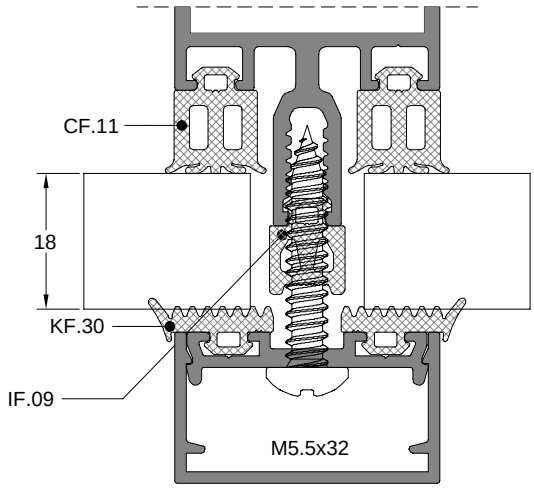

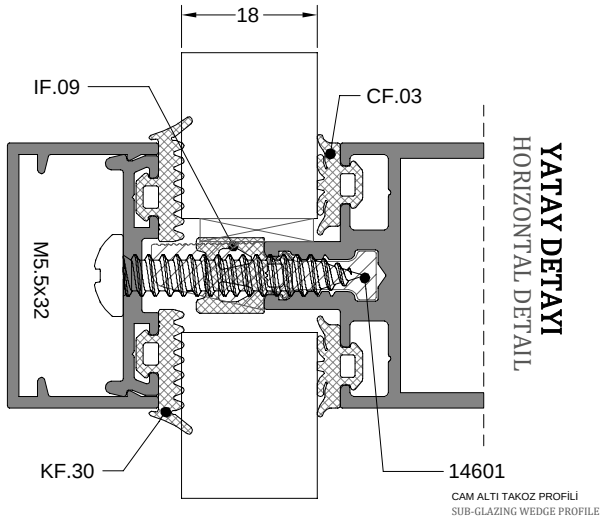

YATAY DETAYI
HORIZONTAL DETAIL

20 MM

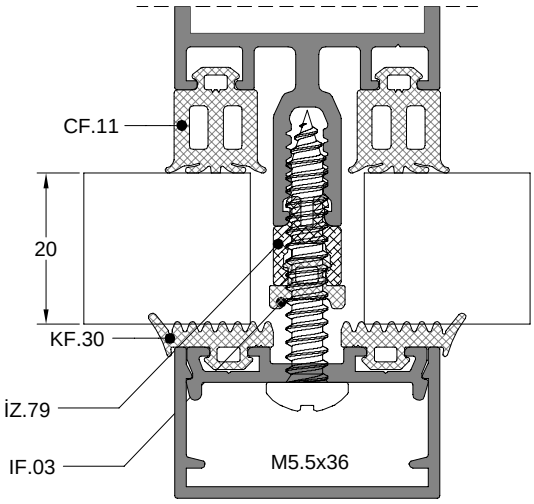

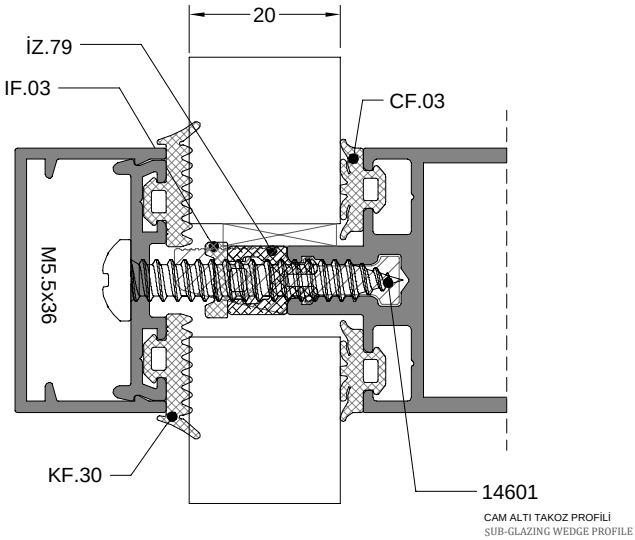

22 MM

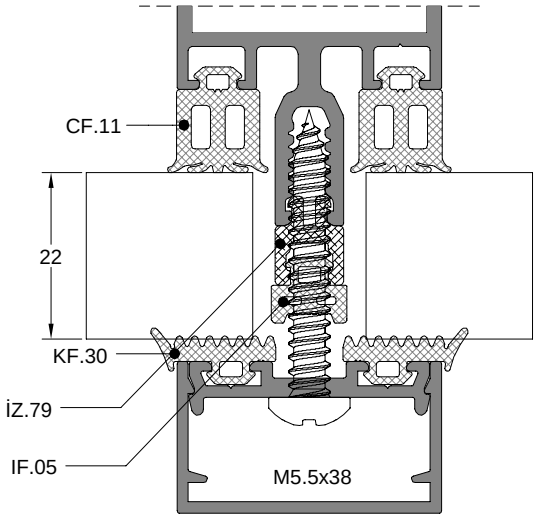

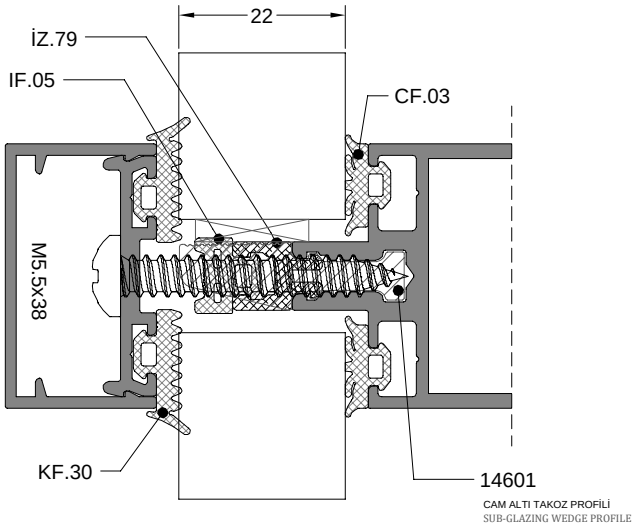

24 MM

DÜŞEY DETAYI
VERTICAL DETAIL

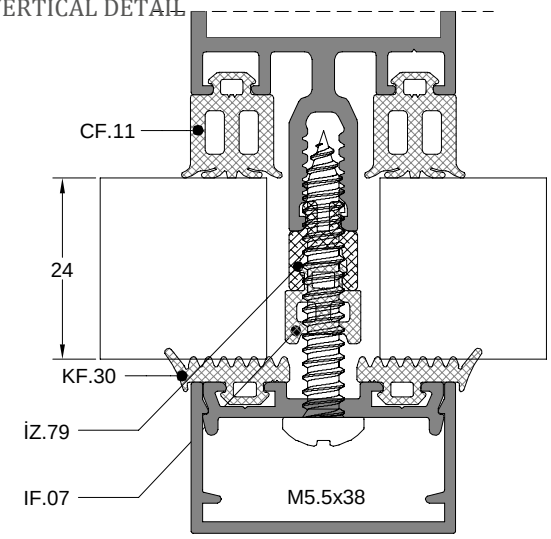

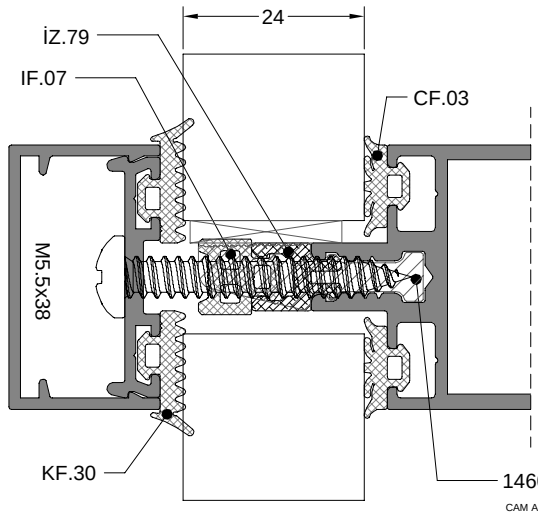

YATAY DETAYI
HORIZONTAL DETAIL

CAM ALTI TAKOZ PROFİLİ
SUB-GLAZING WEDGE PROFILE

26 MM

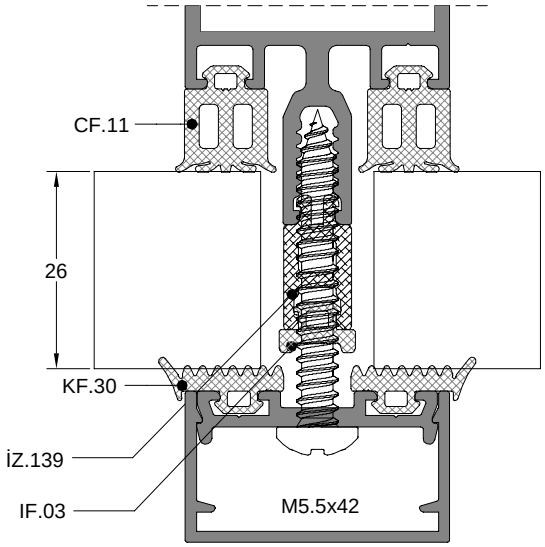

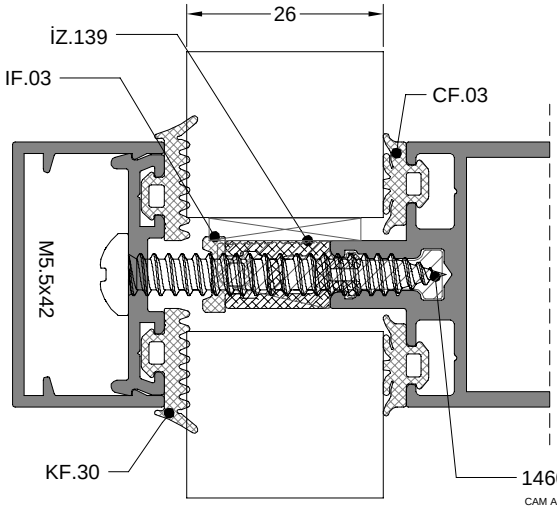

CAM ALTI TAKOZ PROFİLİ
SUB-GLAZING WEDGE PROFILE

28 MM

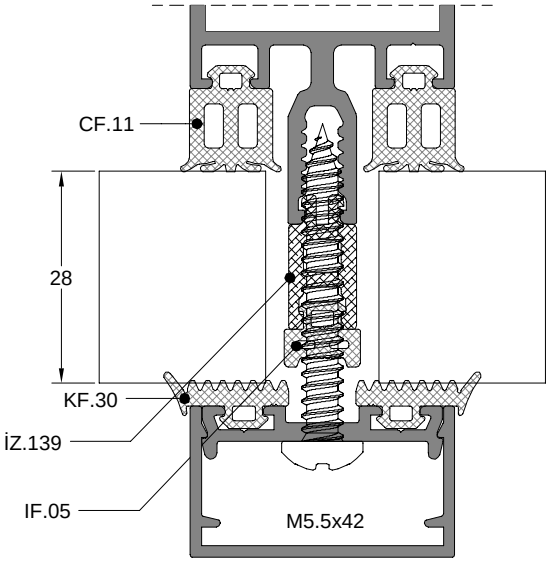

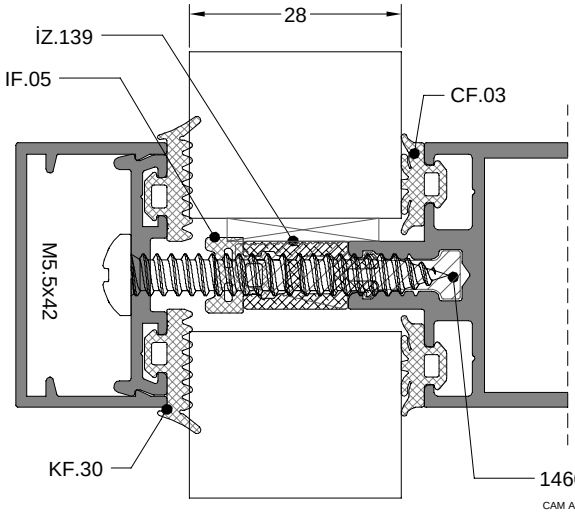

CAM ALTI TAKOZ PROFİLİ
SUB-GLAZING WEDGE PROFILE

30 MM

DÜŞEY DETAYI
VERTICAL DETAIL

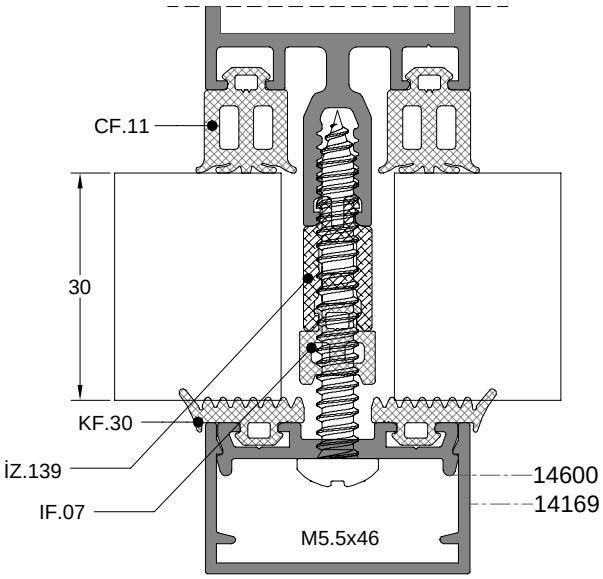

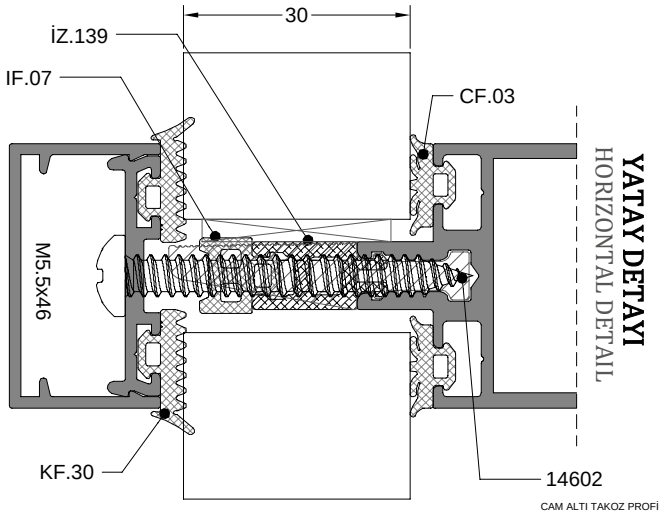

YATAY DETAYI
HORIZONTAL DETAIL

32 MM

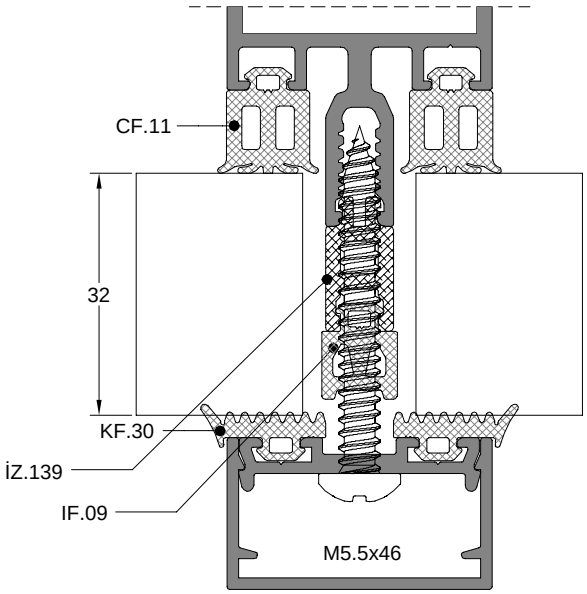

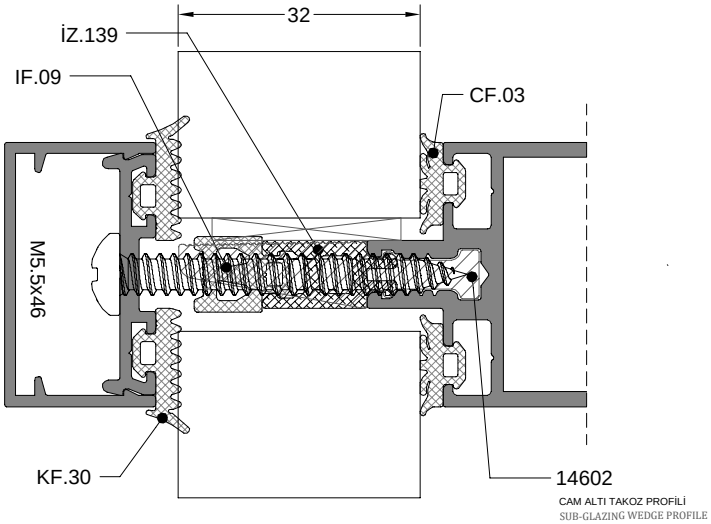

34 MM

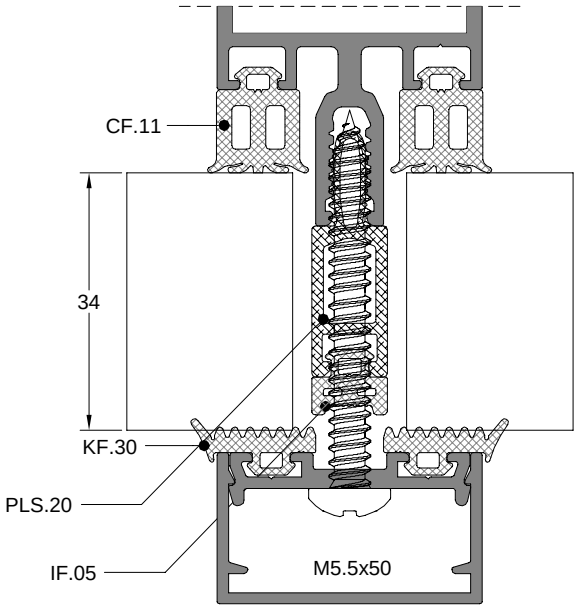

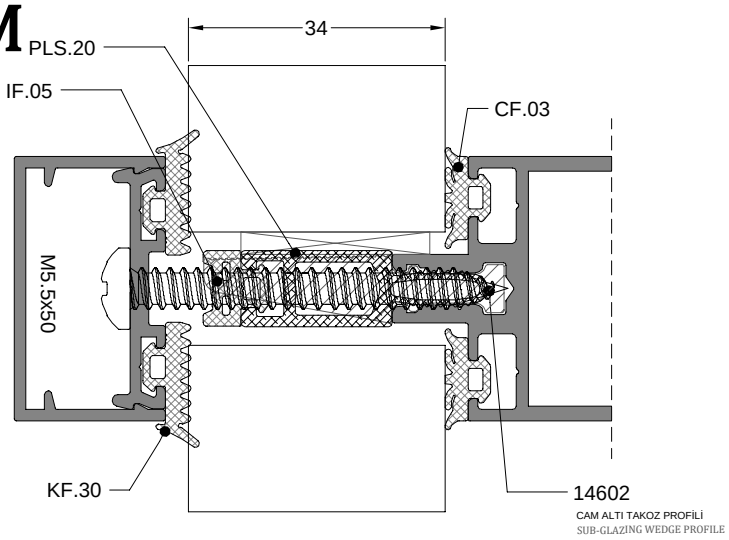

36 MM

DÜŞEY DETAYI
VERTICAL DETAIL

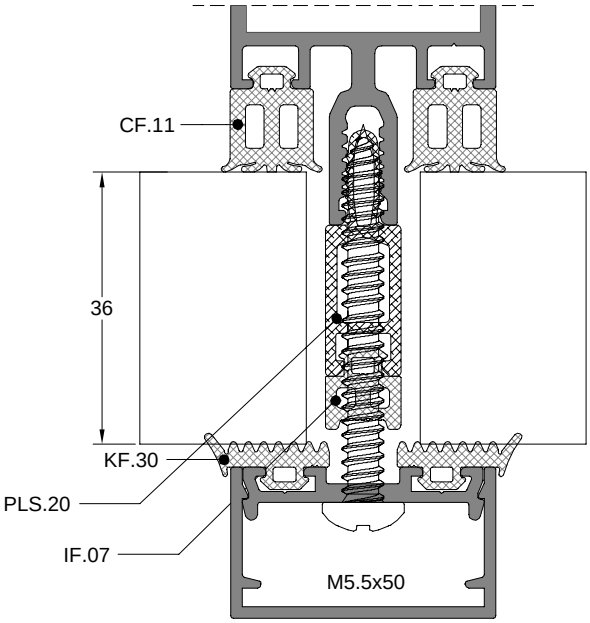

YATAY DETAYI
HORIZONTAL DETAIL

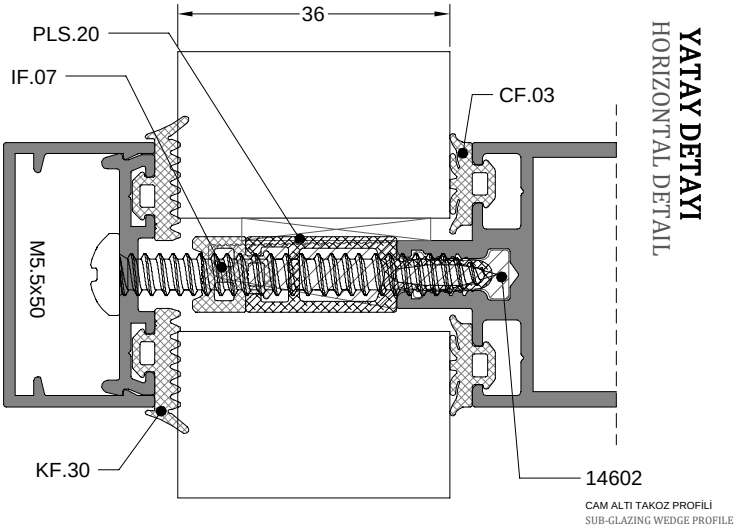

38 MM

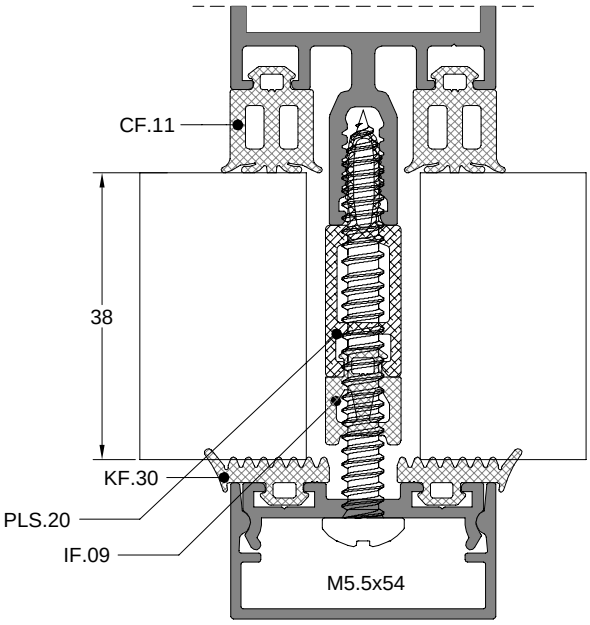

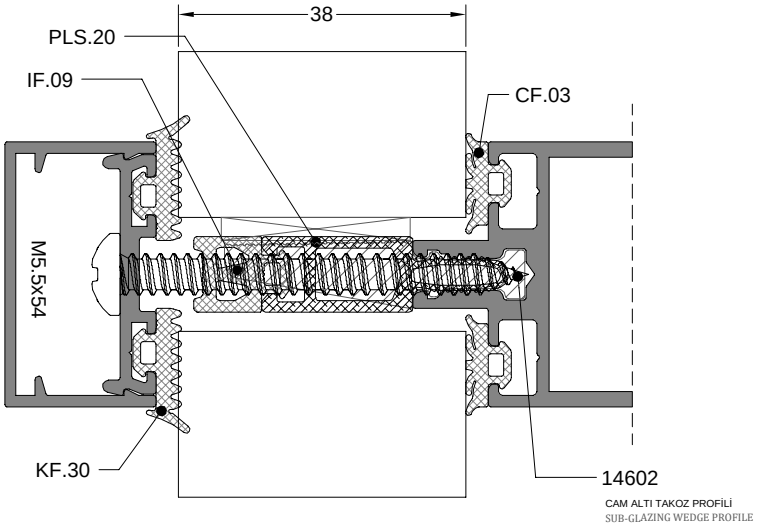

HARMONY 35 CAM KOMBİNASYONU (AÇILIR CAMLAR)

HARMONY 35 GLAZING COMBINATIONS (OPENING WINDOWS)

18 MM

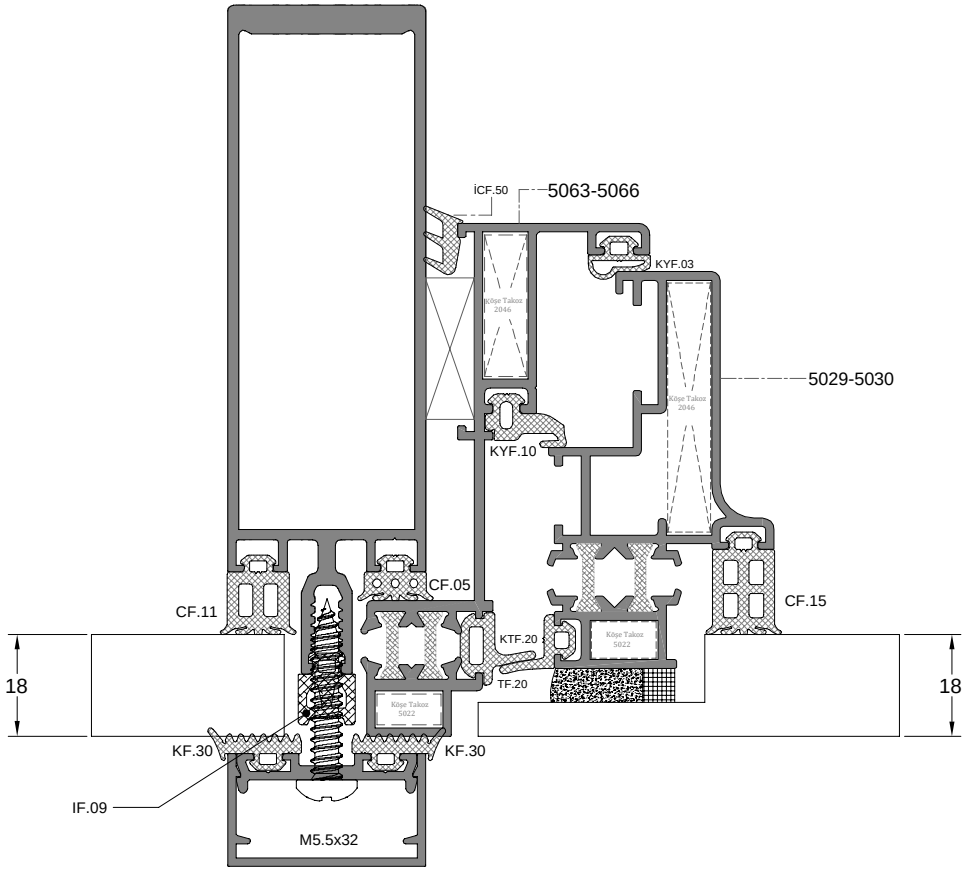
iCF.50
5063-5066
KYF.03
5029-5030
KYF.10
CF.05
CF.11
CF.15
KTF.20
TF.20
18
18
KF.30
KF.30
IF.09
M5.5x32

20 MM

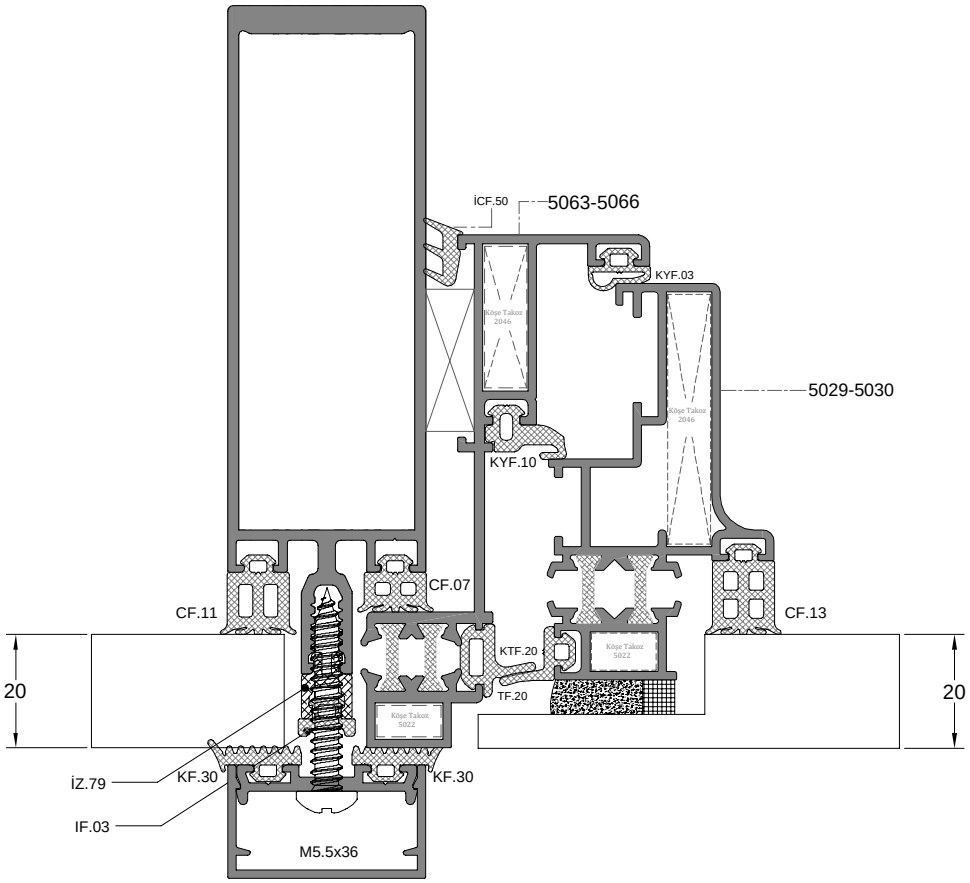
iCF.50
5063-5066
KYF.03
5029-5030
KYF.10
CF.07
CF.11
CF.13
KTF.20
TF.20
20
20
İZ.79
KF.30
KF.30
IF.03
M5.5x36

22 MM

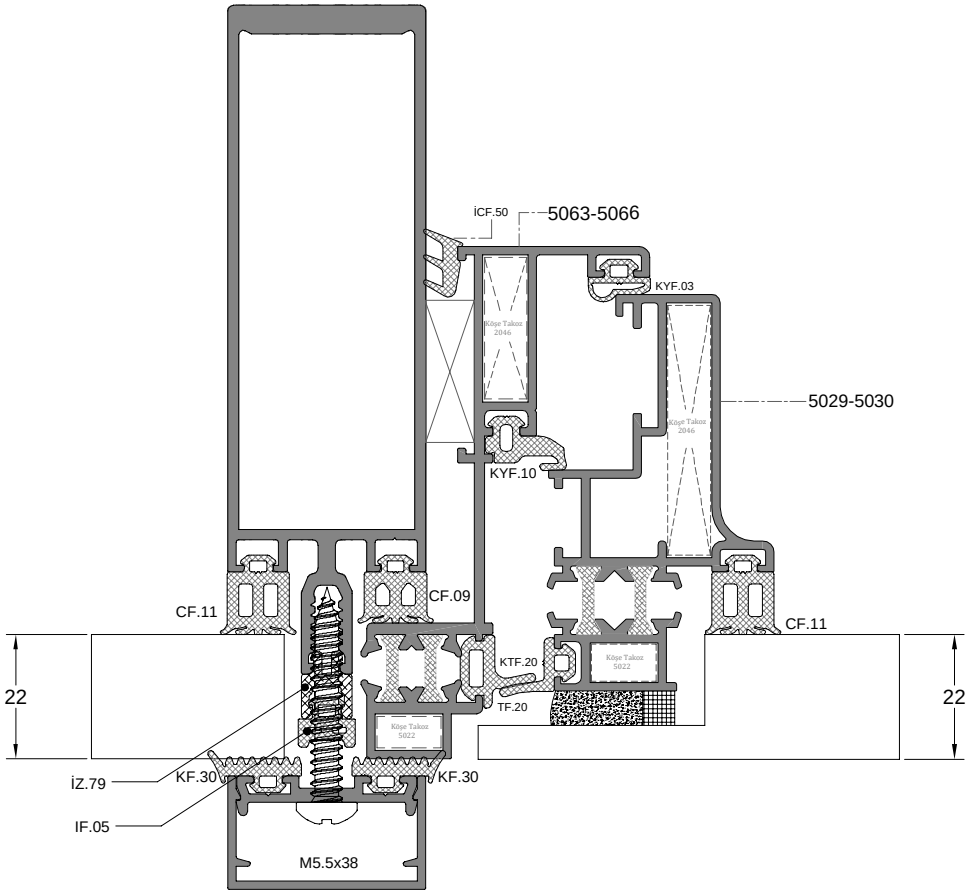
iCF.50
5063-5066
KYF.03
5029-5030
KYF.10
CF.09
CF.11
CF.11
KTF.20
TF.20
22
22
İZ.79
KF.30
KF.30
IF.05
M5.5x38

24 MM

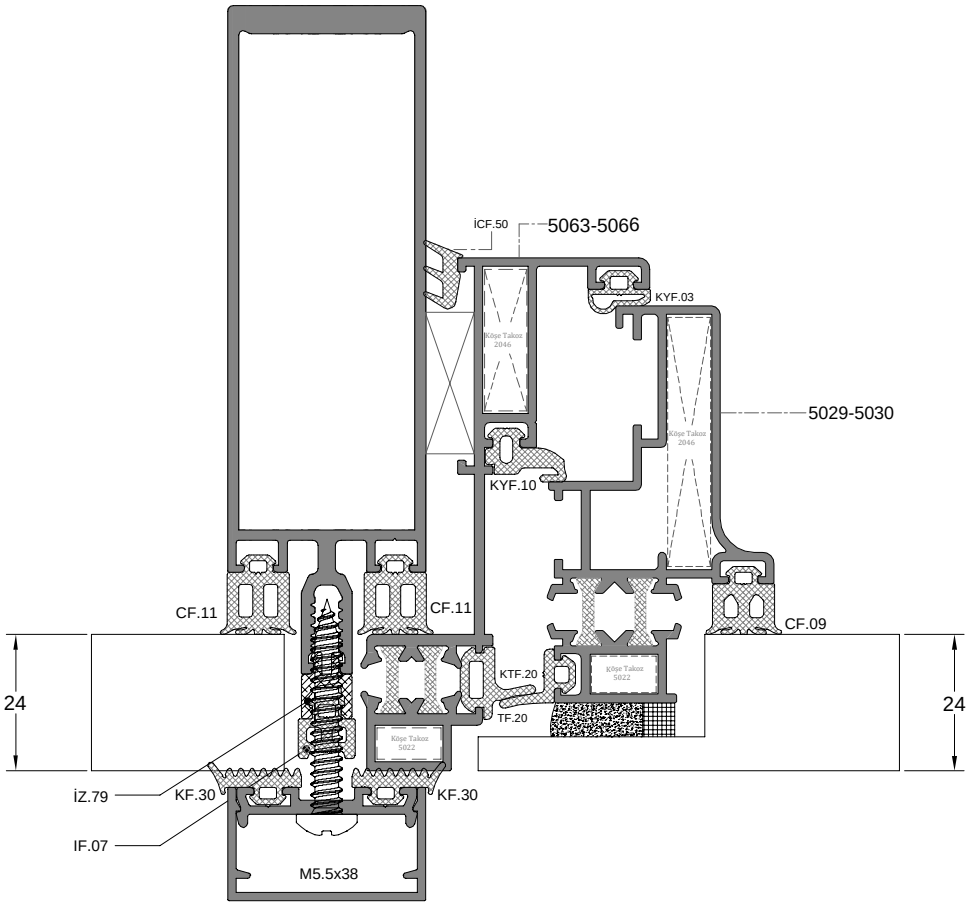
iCF.50
5063-5066
KYF.03
5029-5030
KYF.10
CF.11
CF.11
CF.09
KTF.20
TF.20
24
24
İZ.79
KF.30
KF.30
IF.07
M5.5x38

26 MM

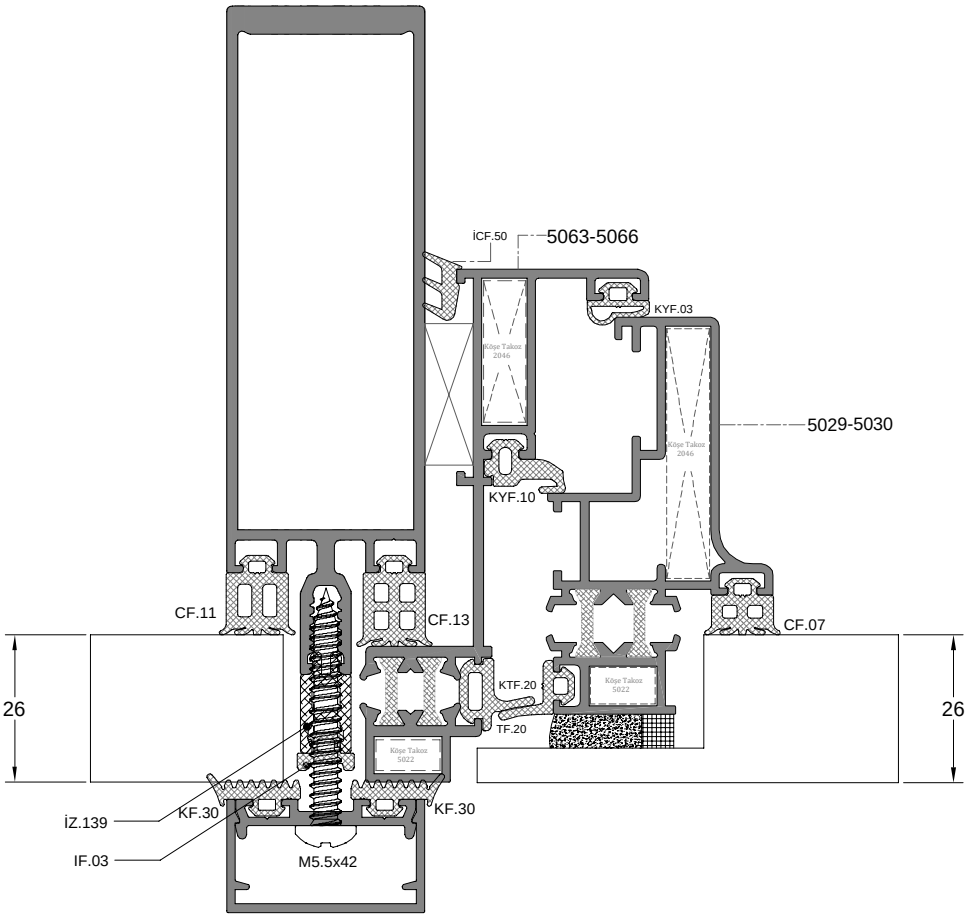
iCF.50
5063-5066
KYF.03
5029-5030
KYF.10
CF.11
CF.13
CF.07
26
KTF.20
TF.20
26
İZ.139
KF.30
KF.30
IF.03
M5.5x42

28 MM

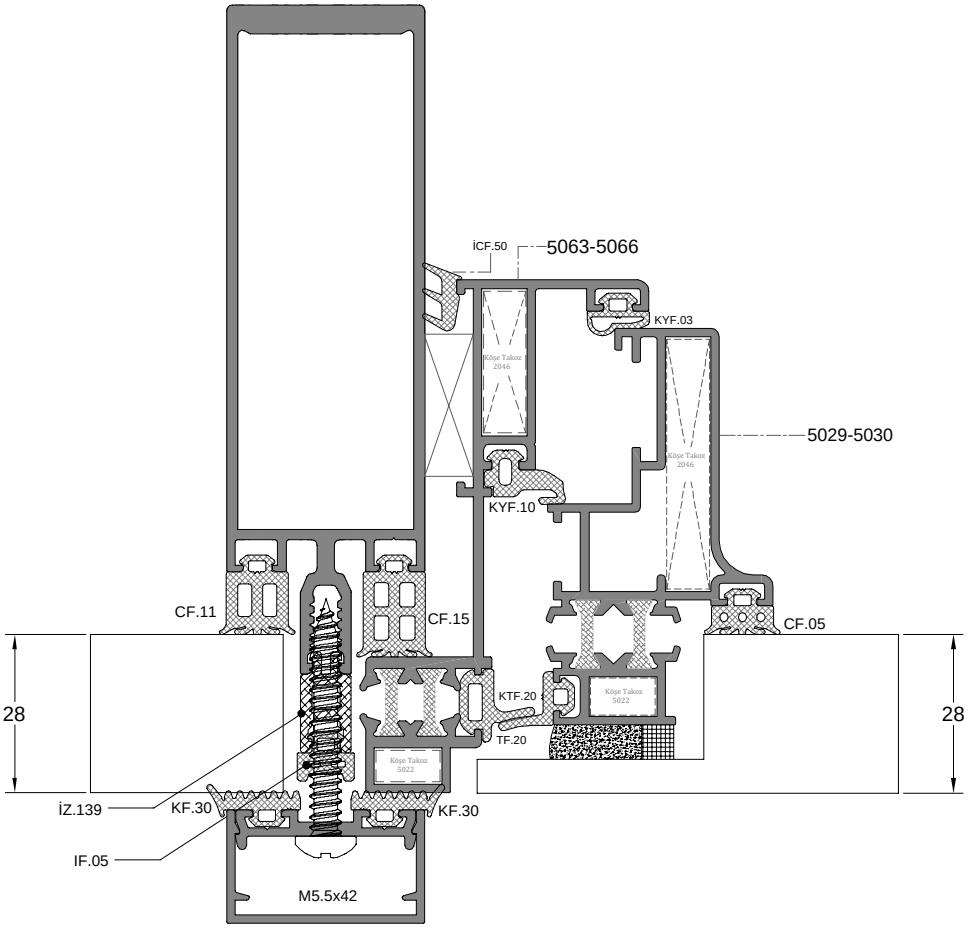
iCF.50
5063-5066
KYF.03
5029-5030
KYF.10
CF.11
CF.15
CF.05
28
KTF.20
TF.20
28
İZ.139
KF.30
KF.30
IF.05
M5.5x42

HARMONY 35 SİSTEM KESİM ÖLÇÜLERİ

HARMONY 35 SYSTEM CUTTING DIMENSIONS

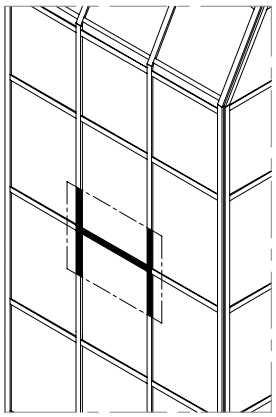

KAPAKLI CEPHE SİSTEMİ YATAY PROFİL KESİM ÖLÇÜSÜ
CAPED CURTAIN WALL SYSTEM HORIZONTAL PROFILE CUTTING SIZE

Kod Code	Çizim Drawing	Kesim Cut	Miktar Quantity	Ölçüler Dimensions
xxxx Yatay Profil Horizontal Profile		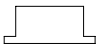	1Pcs / Adet	YG= L-15
KB-10 Alt Baskı Profili Under Exten. Prf.		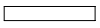	1Pcs / Adet	KAG= L-35
14169 Kapak Profili Cover Prf.			1Pcs / Adet	KAG= L-35
CAM GLASS			1Pcs / Adet	CG= L-15

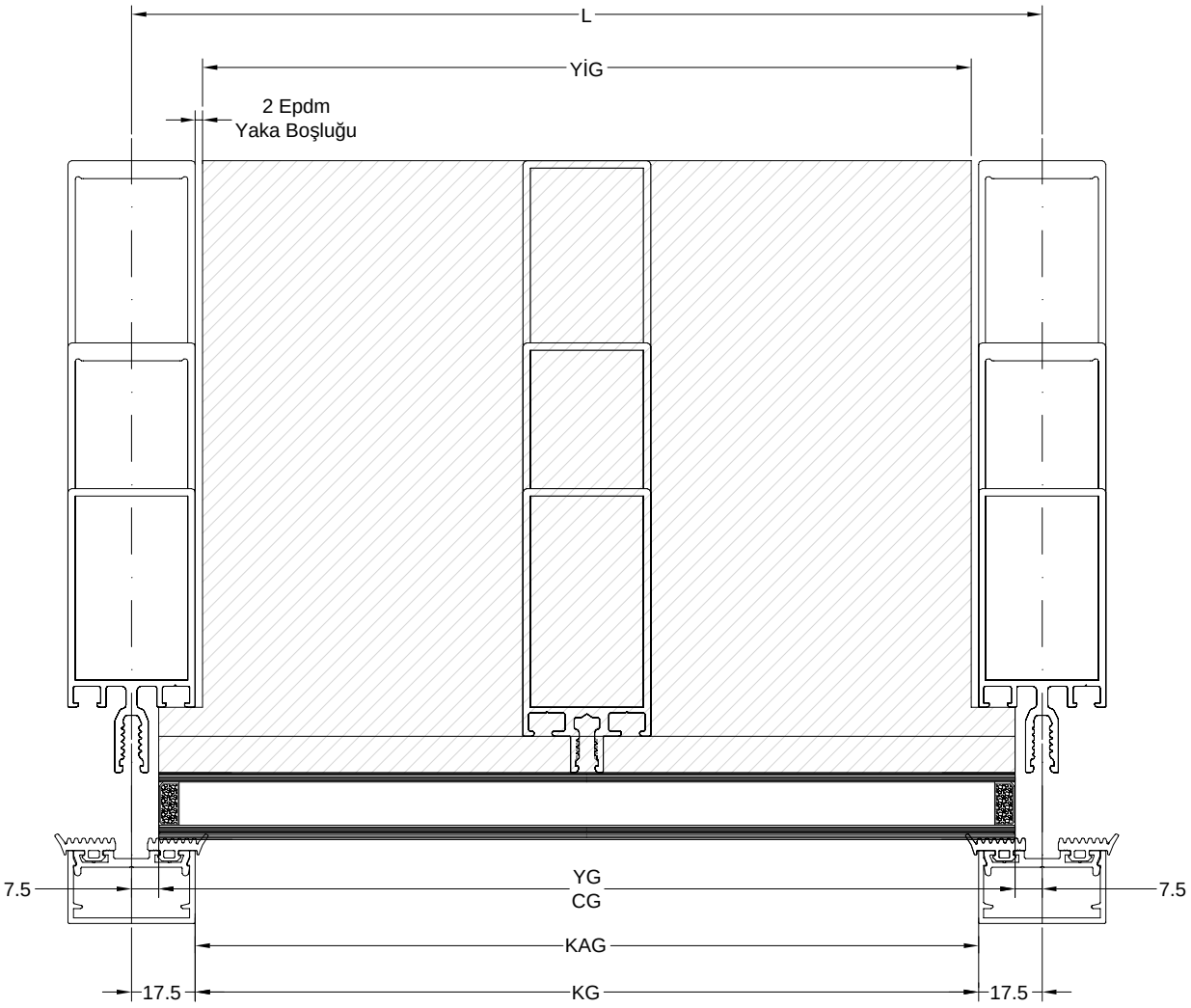

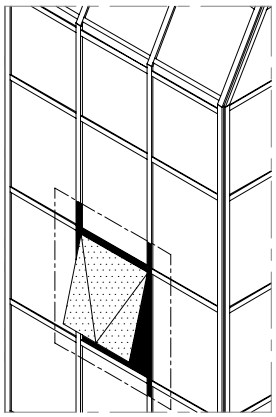

KAPAKLI CEPHE SİSTEMİ KASA VE KANAT AÇILIR KESİM ÖLÇÜSÜ
CAPED CURTAIN WALL SYSTEM FRAME AND SASH OPENING CUTTING SIZE

Kod Code	Çizim Drawing	Kesim Cut	Miktar Quantity	Ölçüler Dimensıons
5063-5066 Kasa Profili Frame Profile	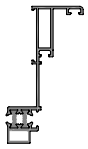		2Pcs / Adet	FH= L-14
5029-5030 Kanat Profili Sash Profile	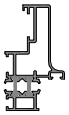	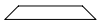	2Pcs / Adet	SH= L-78
CAM GLASS				SGL1= SL-55,2
	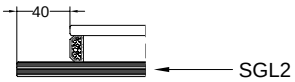			SGL2= SL+24

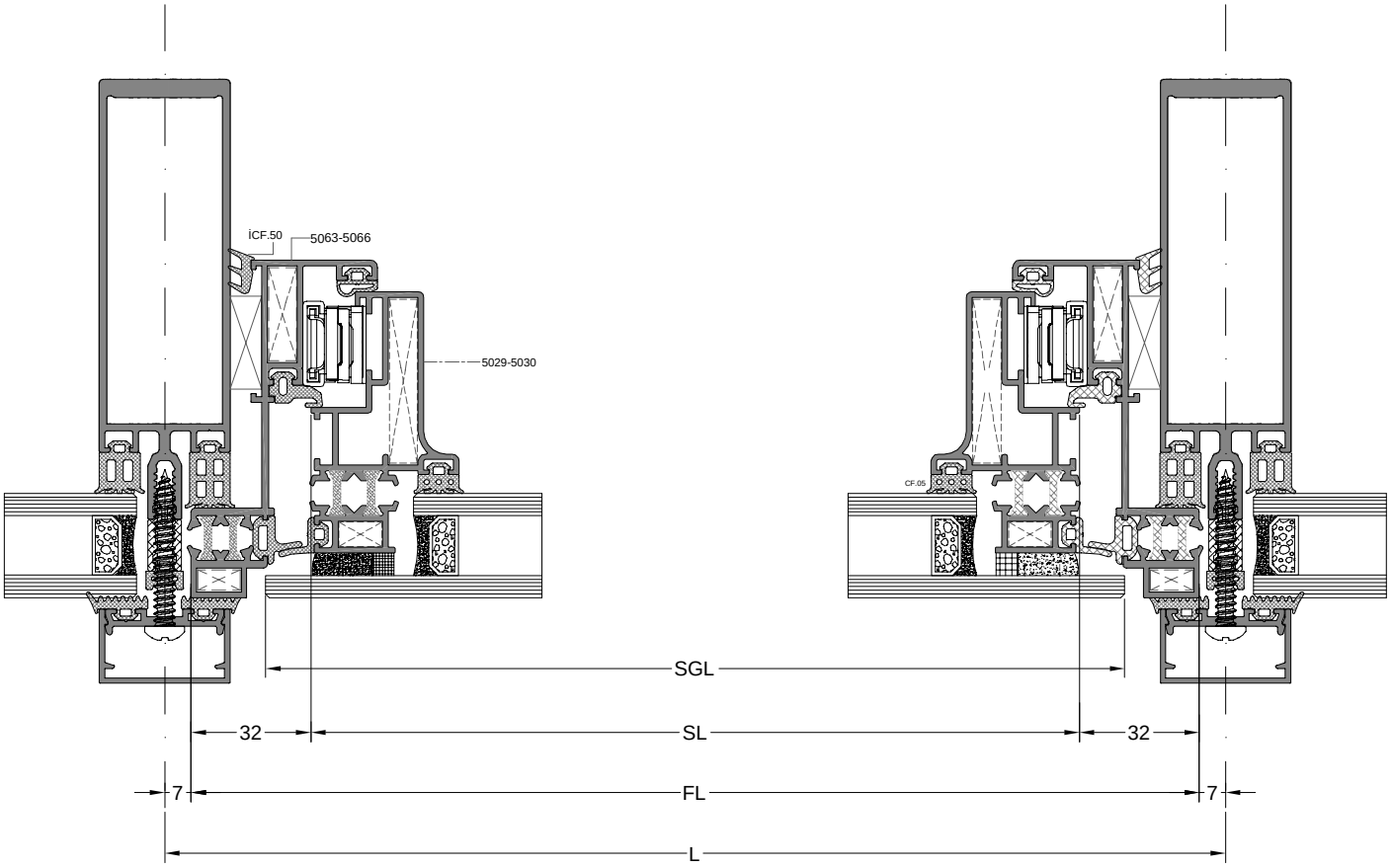

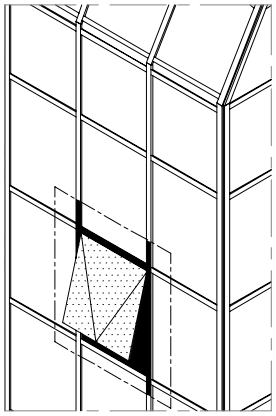

KAPAKLI CEPHE SİSTEMİ KASA VE KANAT AÇILIR KESİM ÖLÇÜSÜ
CAPED CURTAIN WALL SYSTEM FRAME AND SASH OPENING CUTTING SIZE

Kod Code	Çizim Drawing	Kesim Cut	Miktar Quantity	Ölçüler Dimensıons
5063-5066 Kasa Profili Frame Profile	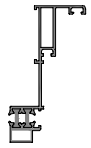		2Pcs / Adet	FH= H-14
5029-5030 Kanat Profili Sash Profile	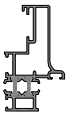	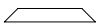	2Pcs / Adet	SH= H-78
CAM GLASS	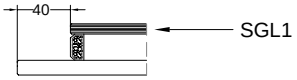			SGL1= SH-55,2
	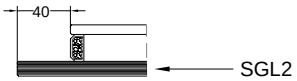			SGL2= SH+24

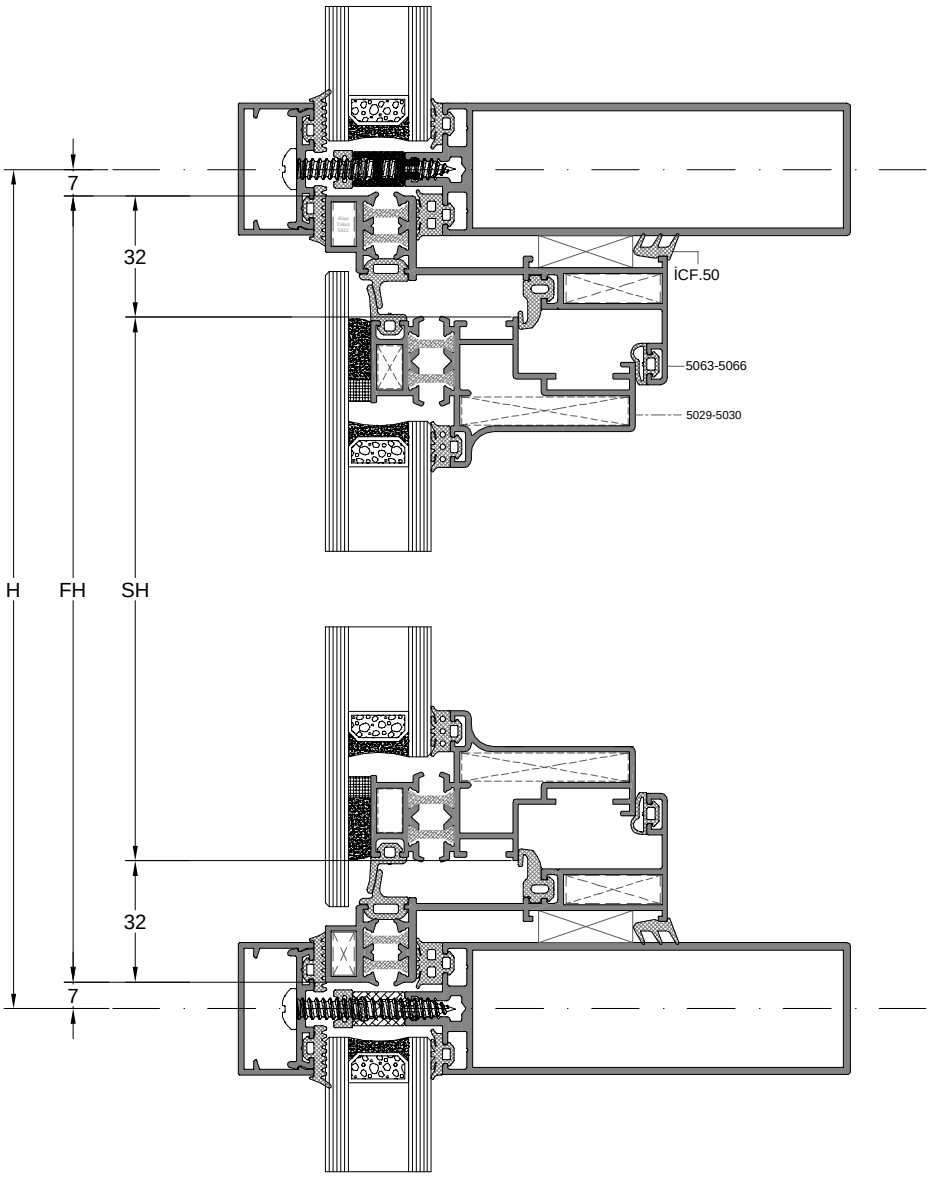

HARMONY 35 MONTAJ TALİMATLARI

HARMONY 35 ASSEMBLY INSTRUCTIONS

YATAY BAĞLANTI MONTAJI
TRANSOM CONNECTOR ASSEMBLY

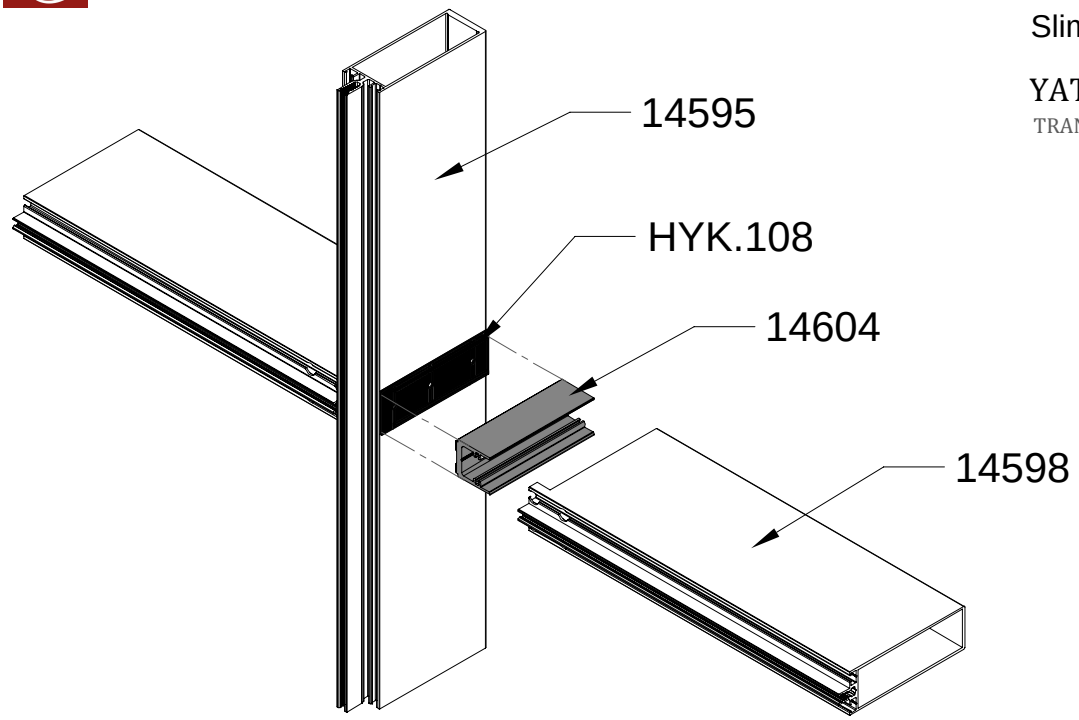

★ Yatay Profil Kertme Ölçüleri
Horizontal Profile Cutting Dimensions

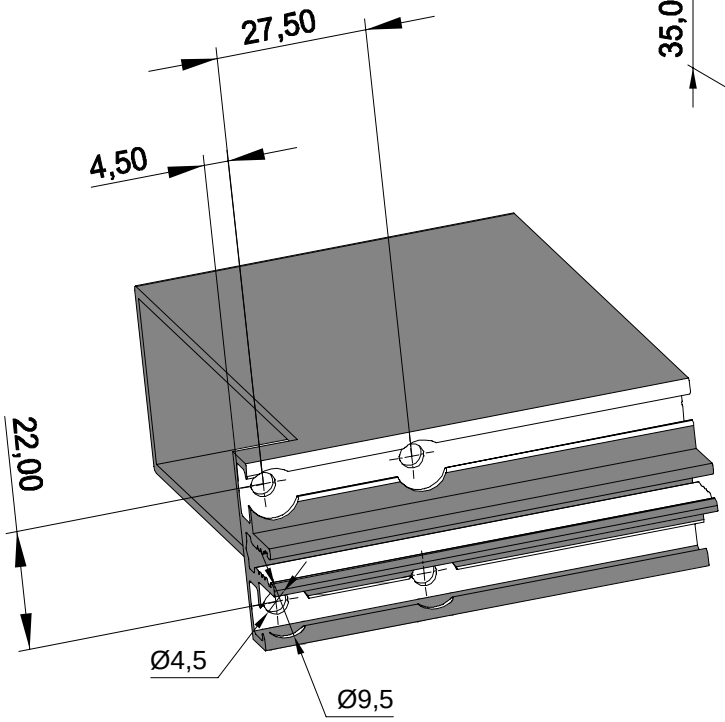

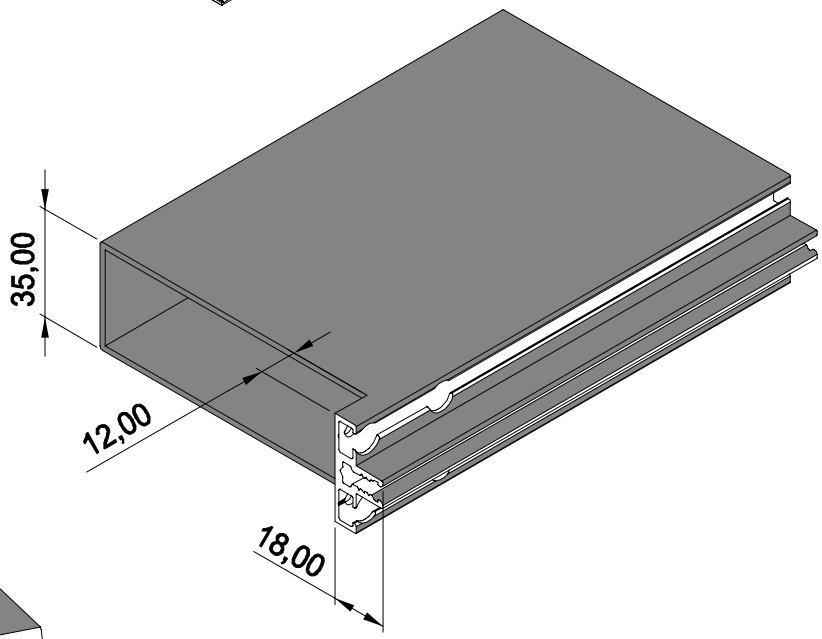

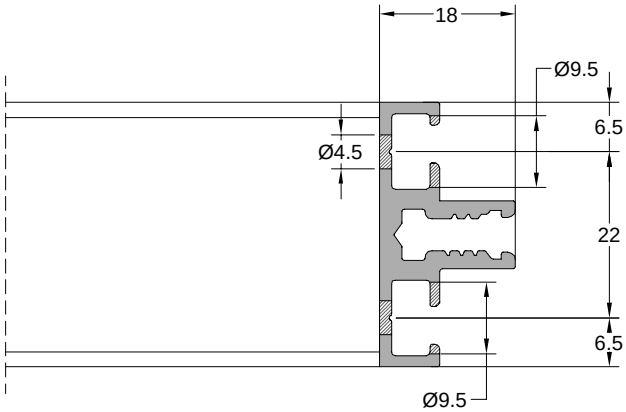

KAPAK VE KAPAK ALTI PROFİLLERİ DELİK İŞLEMLERİ

CORNER AND SUB-CORNER PROFILES
HOLE PHASE

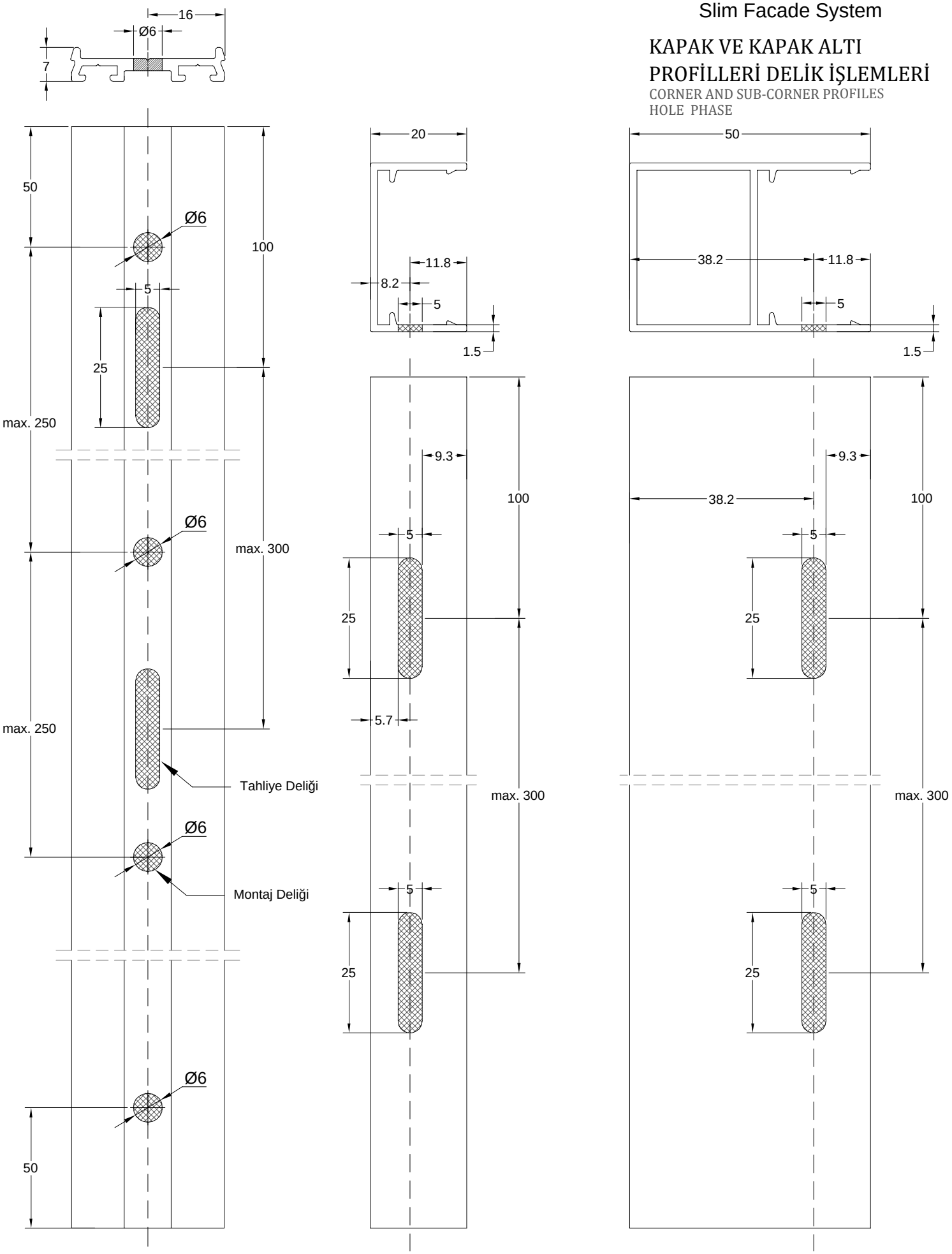

CAM ALTI TAKOZ ŞEMASI
SUB-GLAZING WEDGE DIAGRAM

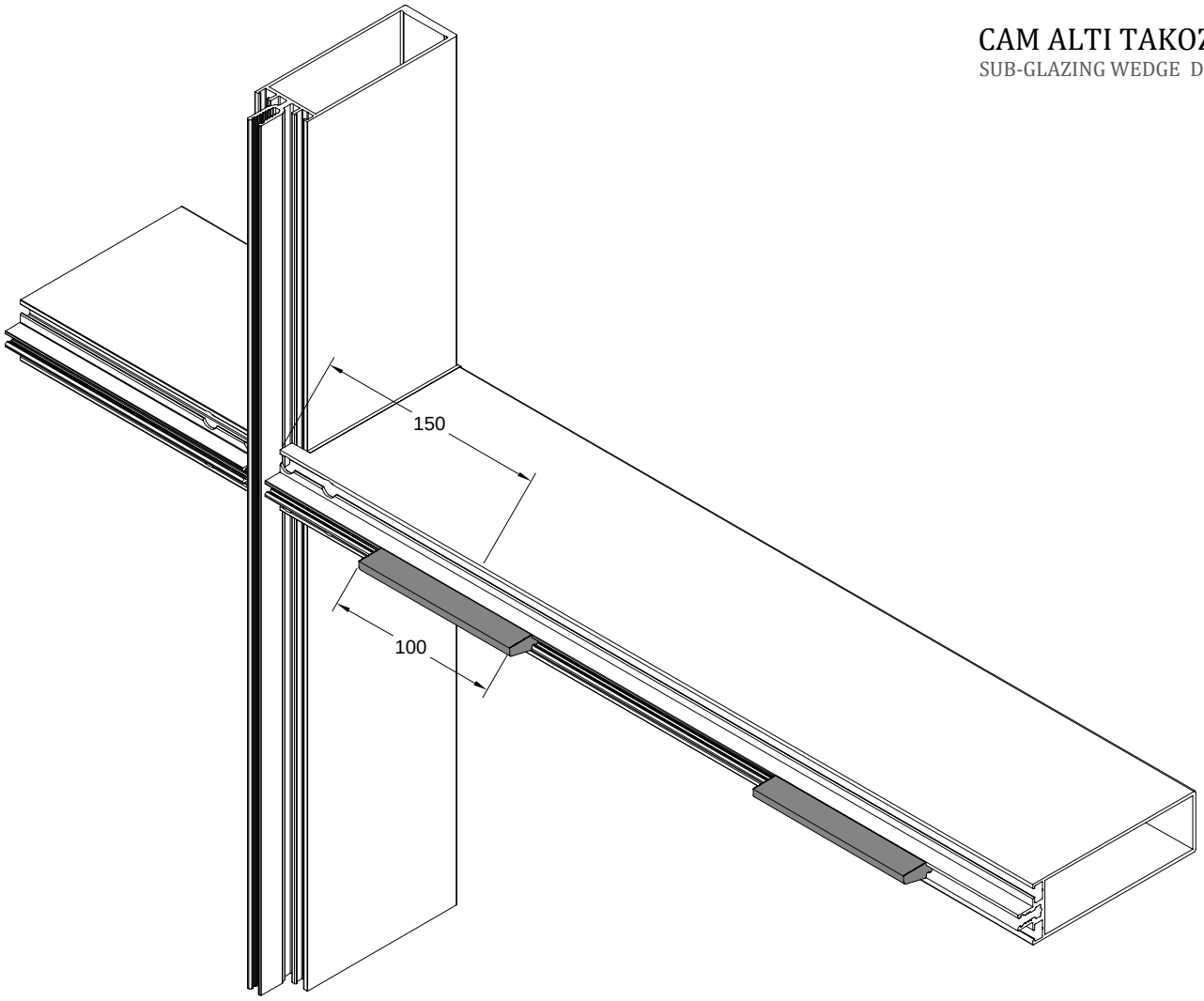
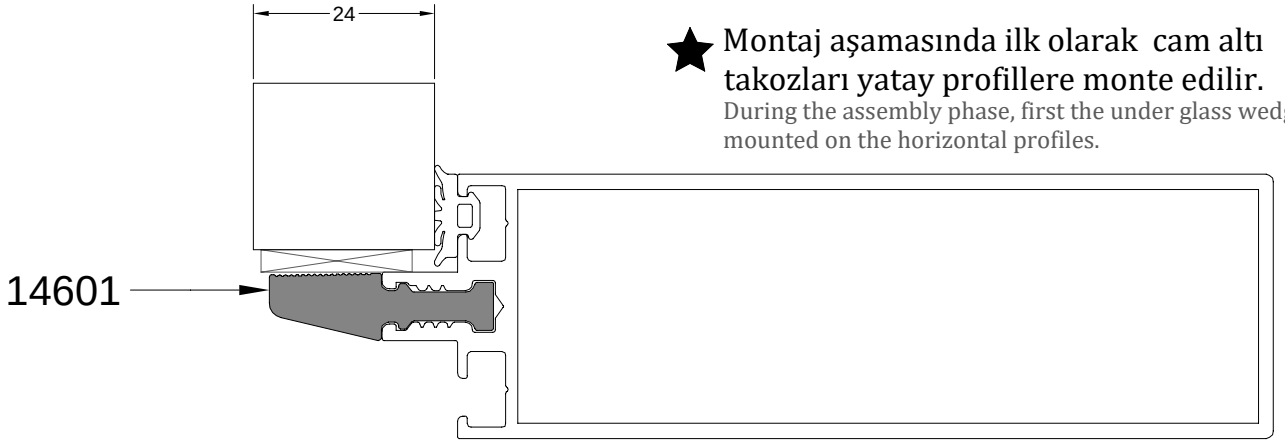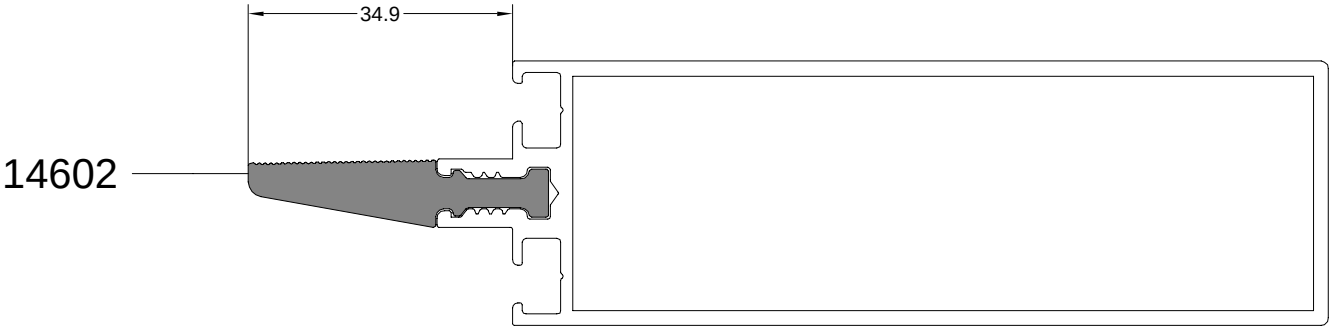
★ Montaj aşamasında ilk olarak cam altı takozları yatay profillere monte edilir.
During the assembly phase, first the under glass wedges are mounted on the horizontal profiles.